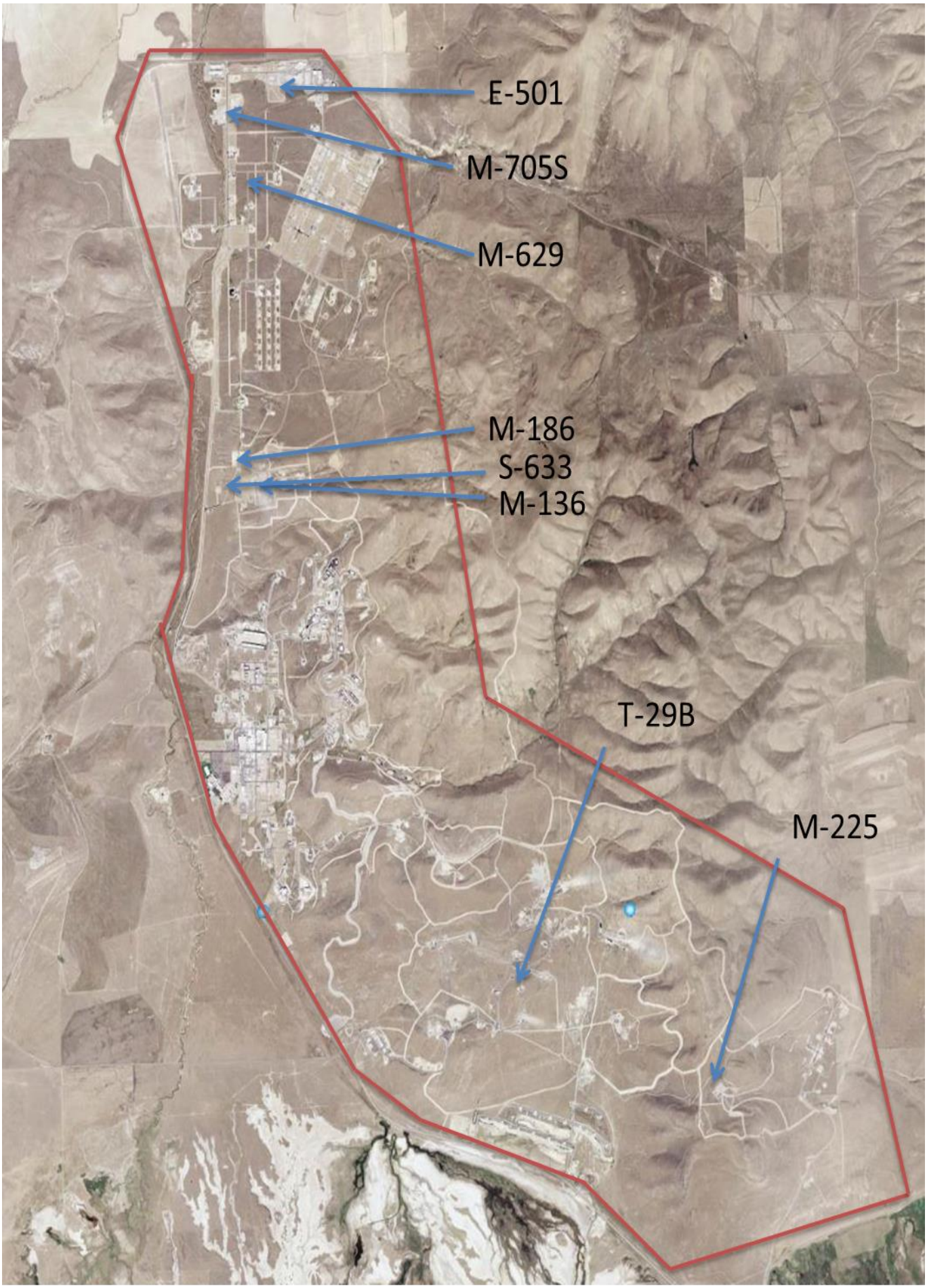

ATK Promontory Facility – Figure 6A

Figure 6B

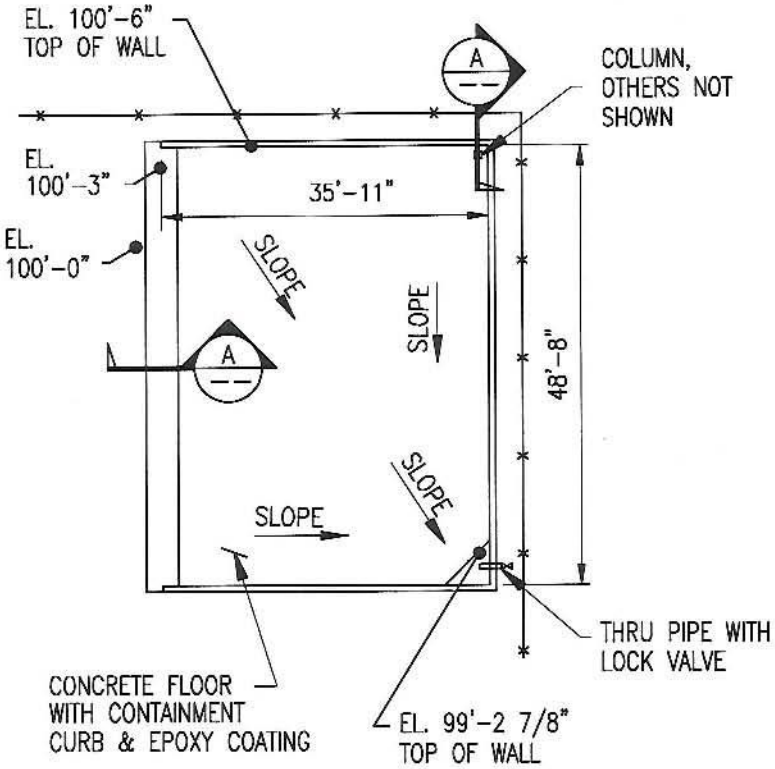

E-501 PLAN VIEW

SCALE: 1" = 20'-0"±

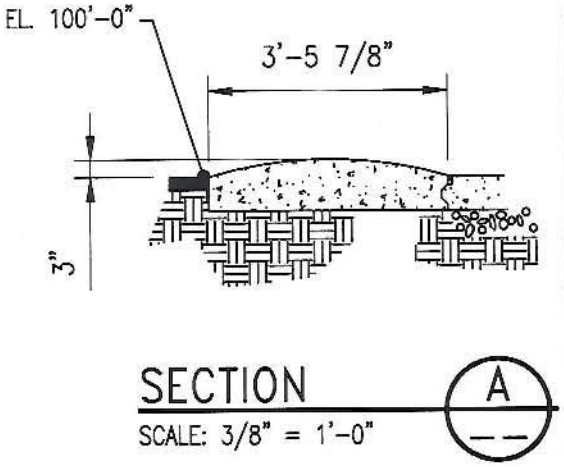

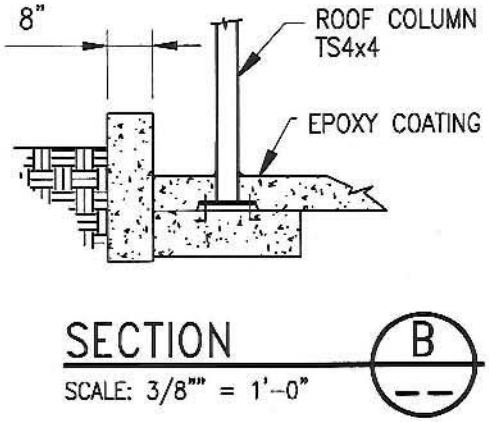

E-501 PAD LAYOUT

FIGURE B-1

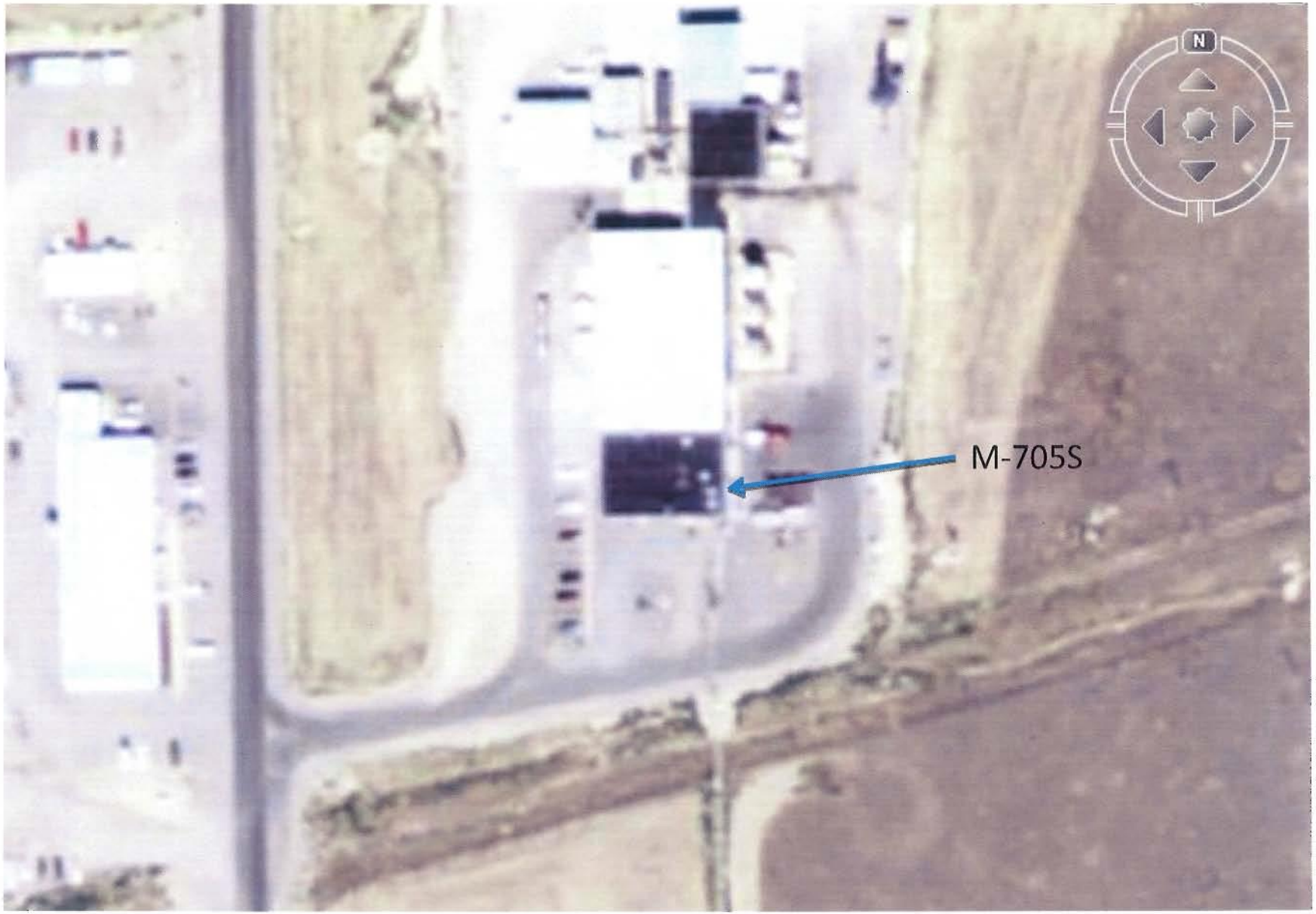

Figure 6C

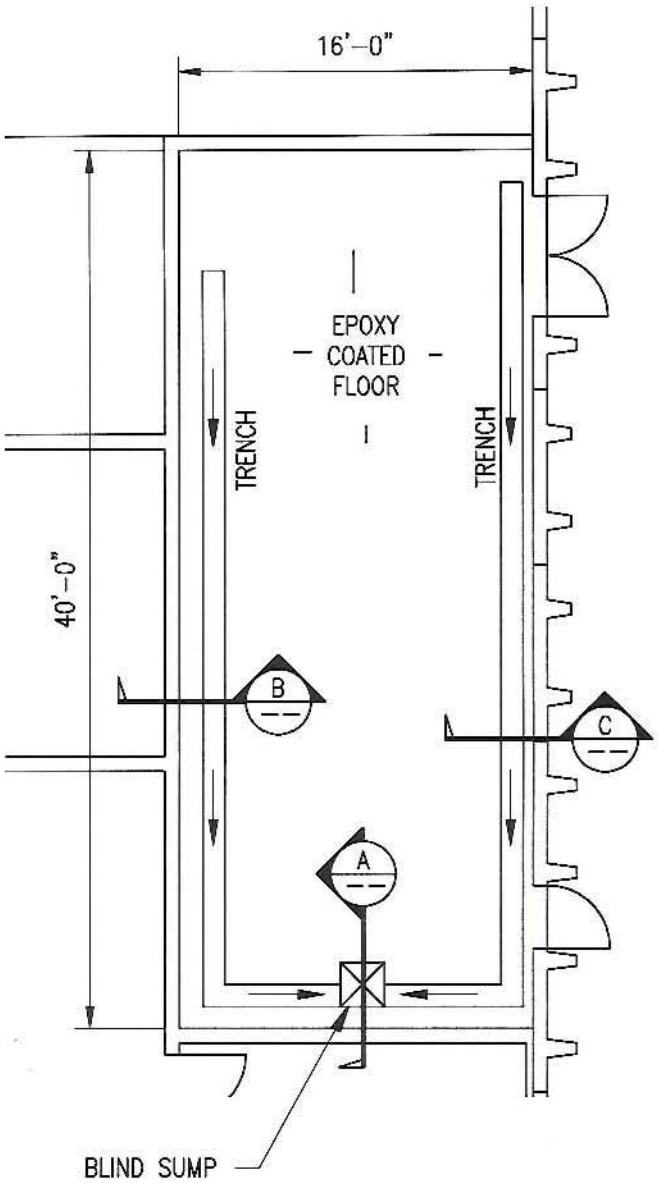

M-705S PLAN VIEW

SCALE: 1/8" = 1'-0"

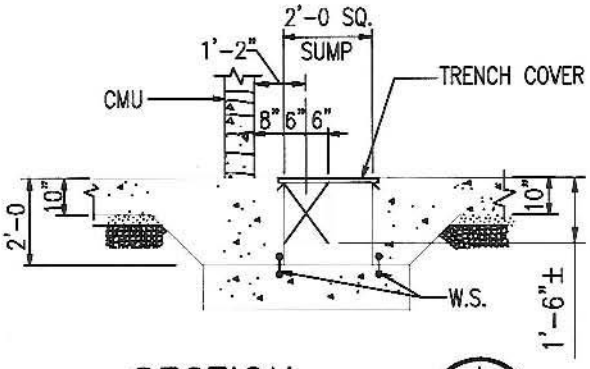

SECTION A

SCALE: 1/4" = 1'-0"

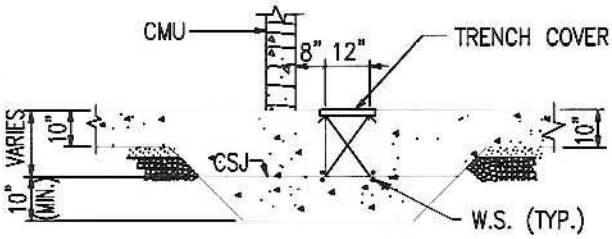

SECTION B

SCALE: 1/4" = 1'-0"

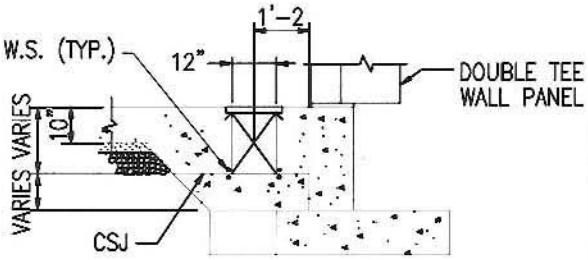

SECTION C

SCALE: 1/4" = 1'-0"

M-705S BUILDING LAYOUT

FIGURE C-1

N

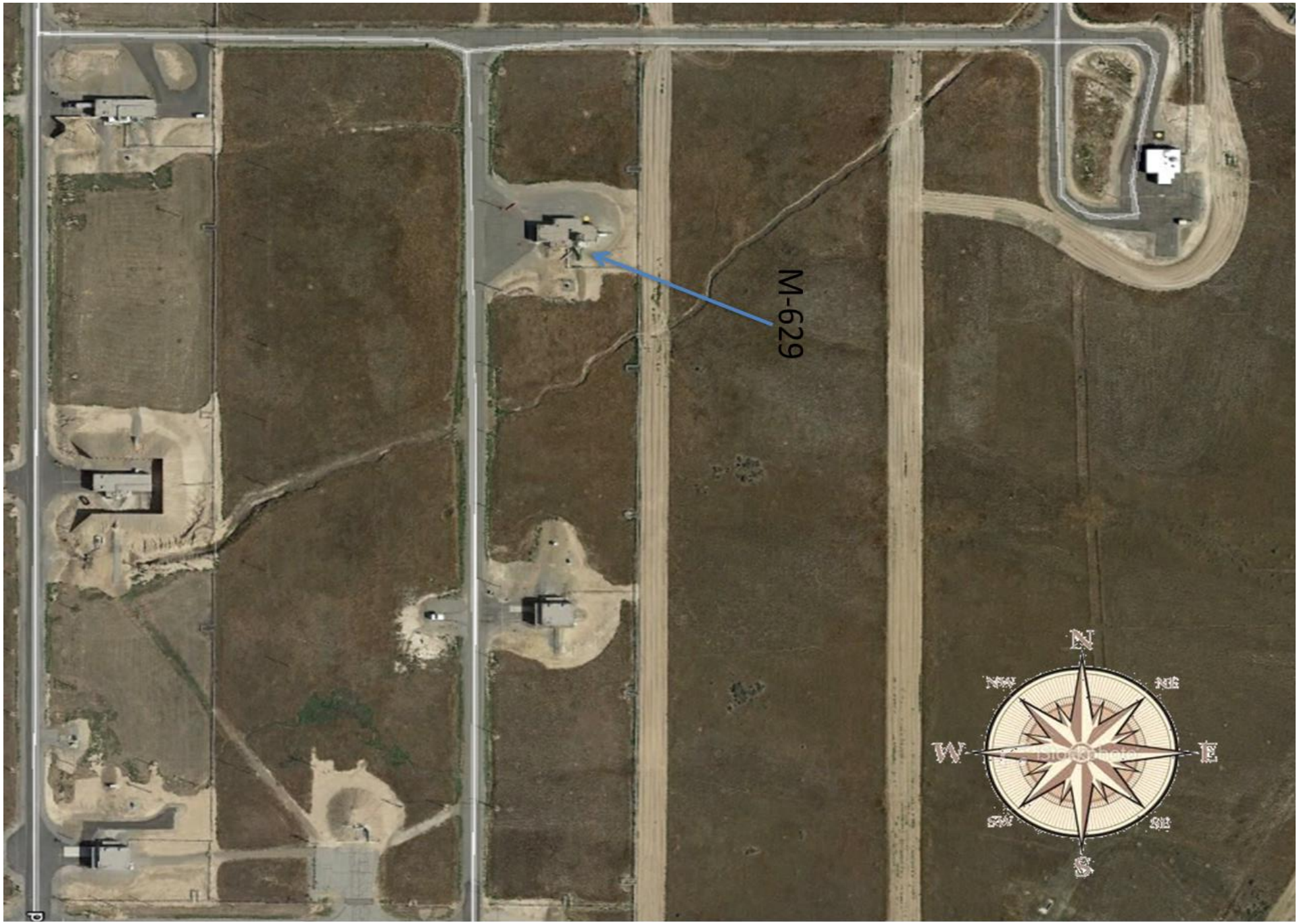

Figure 6D

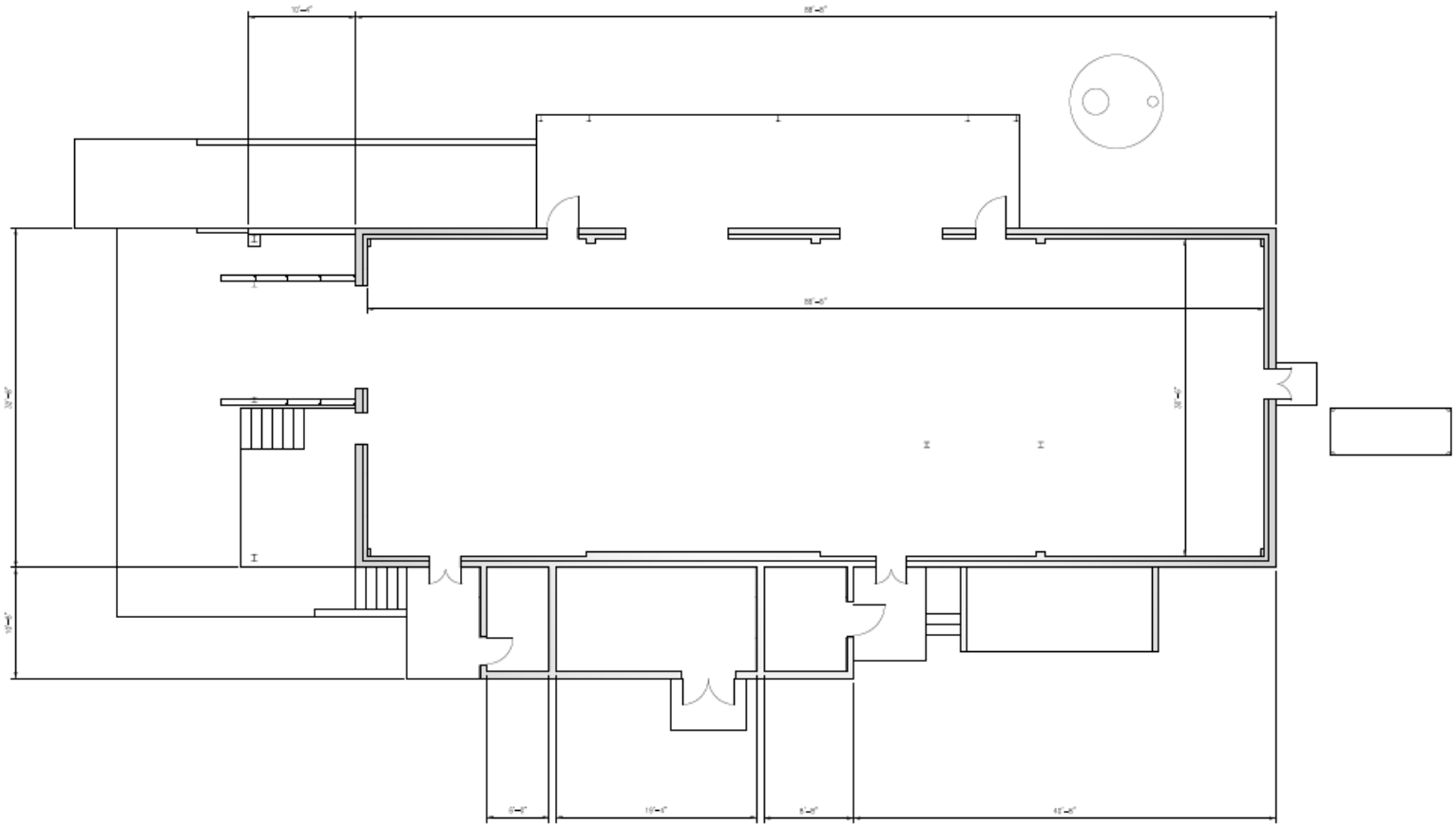

M-629 FLOOR PLAN

Orbital ATK
PLANT SYSTEMS GROUP
PROPULSION SYSTEMS

GRAPHIC SCALE - BUILDING LAYOUT
1/4" = 1'-0"

M-629 Premix

Figure 6E

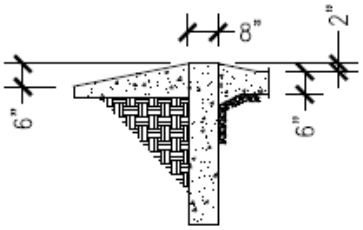

SECTION A
SCALE: 1/4"=1'-0"

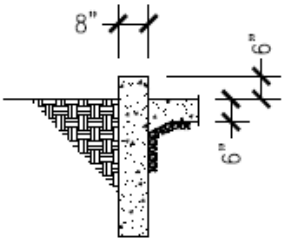

SECTION B
SCALE: 1/4"=1'-0"

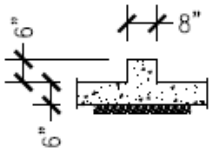

SECTION C
SCALE: 1/4"=1'-0"

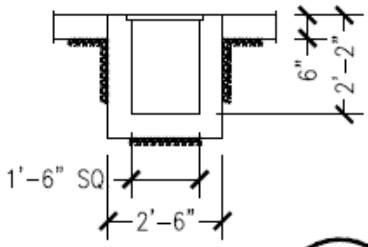

SECTION D
SCALE: 1/4"=1'-0"

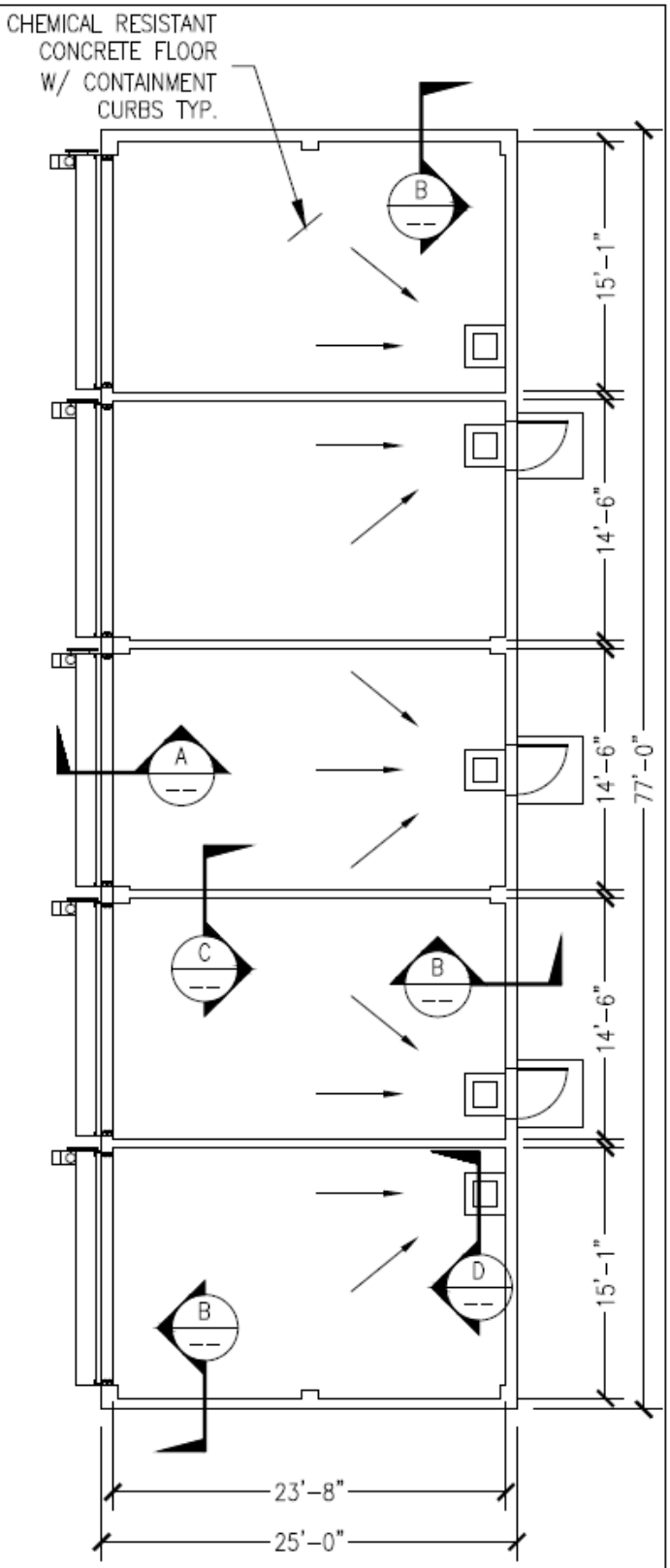

M-186A BUILDING LAYOUT

FIGURE E-1

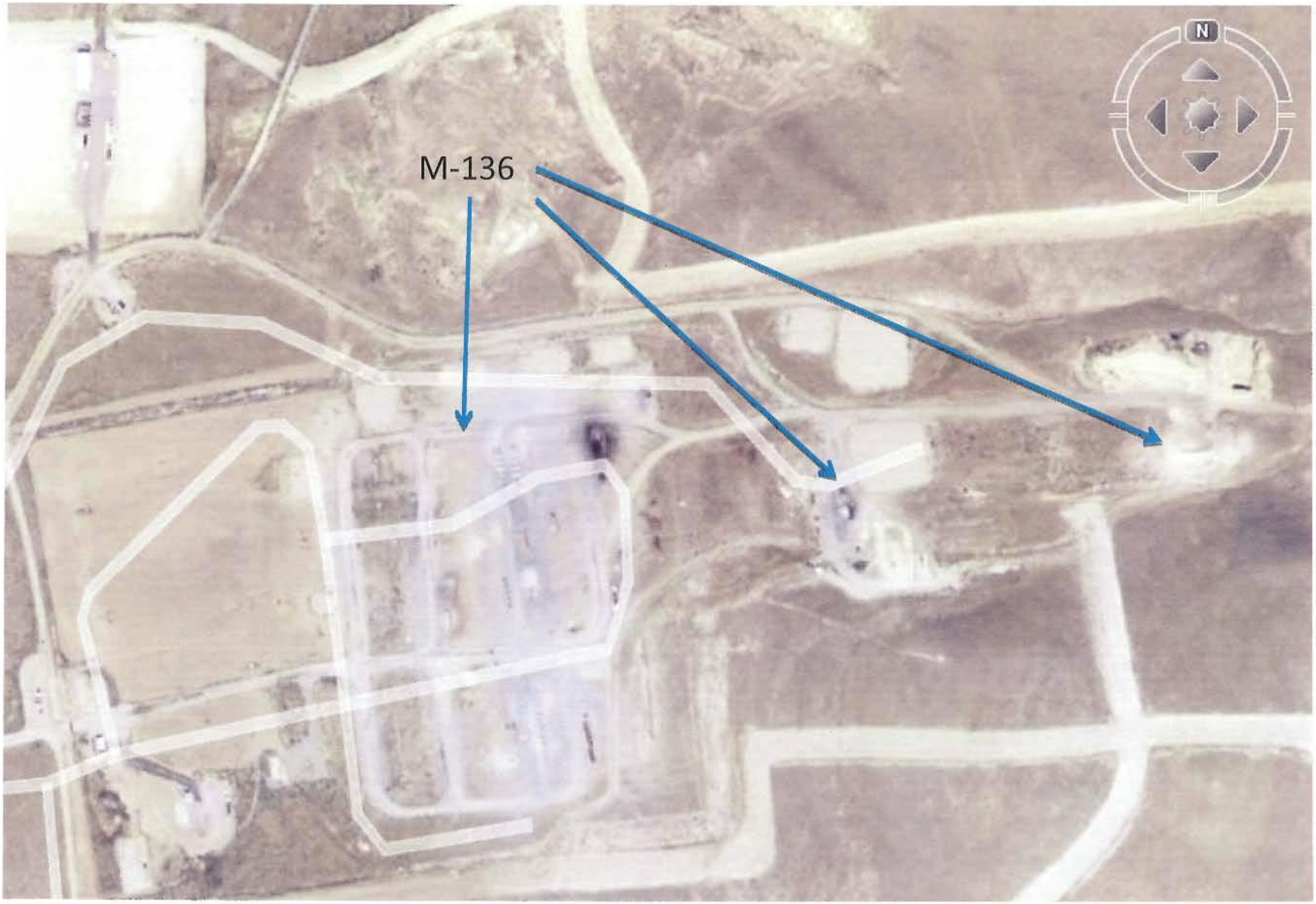

Figure 6F

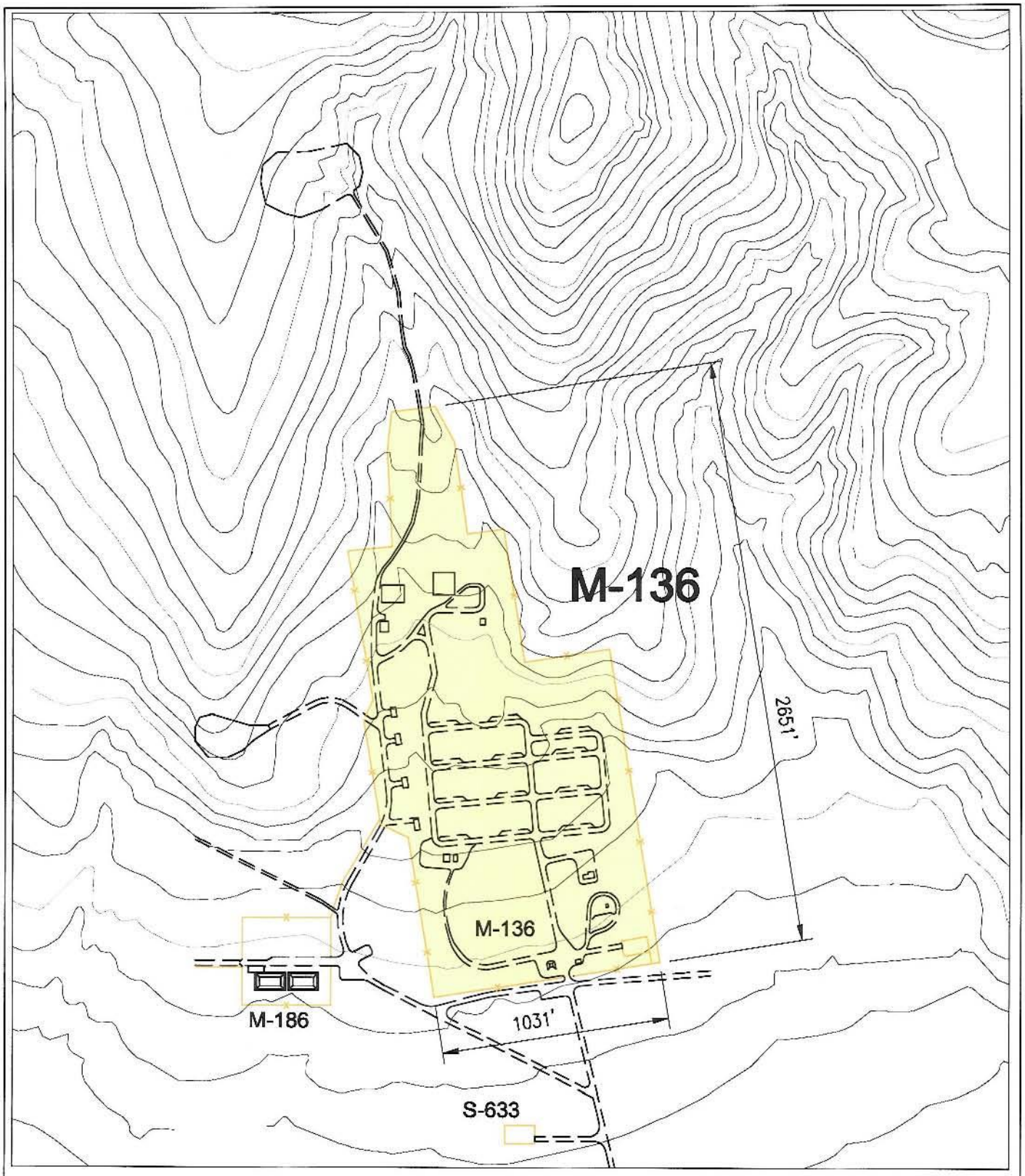

M-136 BURN GROUND FACILITY LAYOUT FIGURE F-1

N

SCALE: 1" = 600' - 0"±

Figure 6H

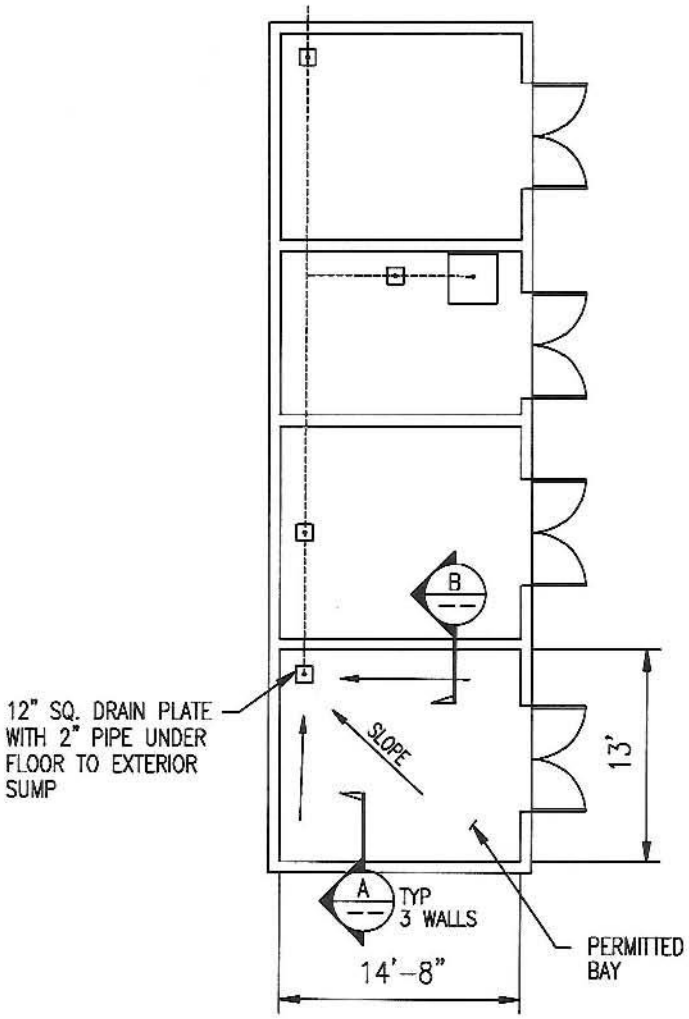

T-29B PLAN VIEW

SCALE: 1" = 10'-0"

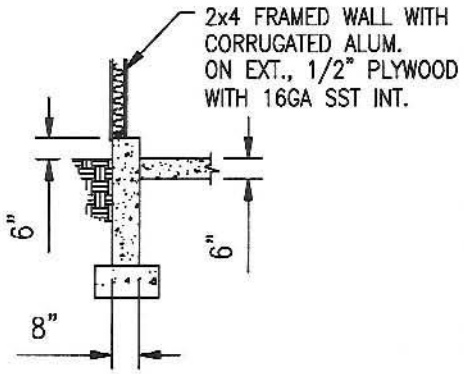

SECTION A

SCALE: 1/4" = 1'-0"

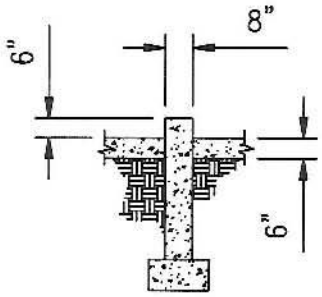

SECTION B

SCALE: 1/4" = 1'-0"

T-29B BUILDING LAYOUT

FIGURE H-1

N

Figure 6I

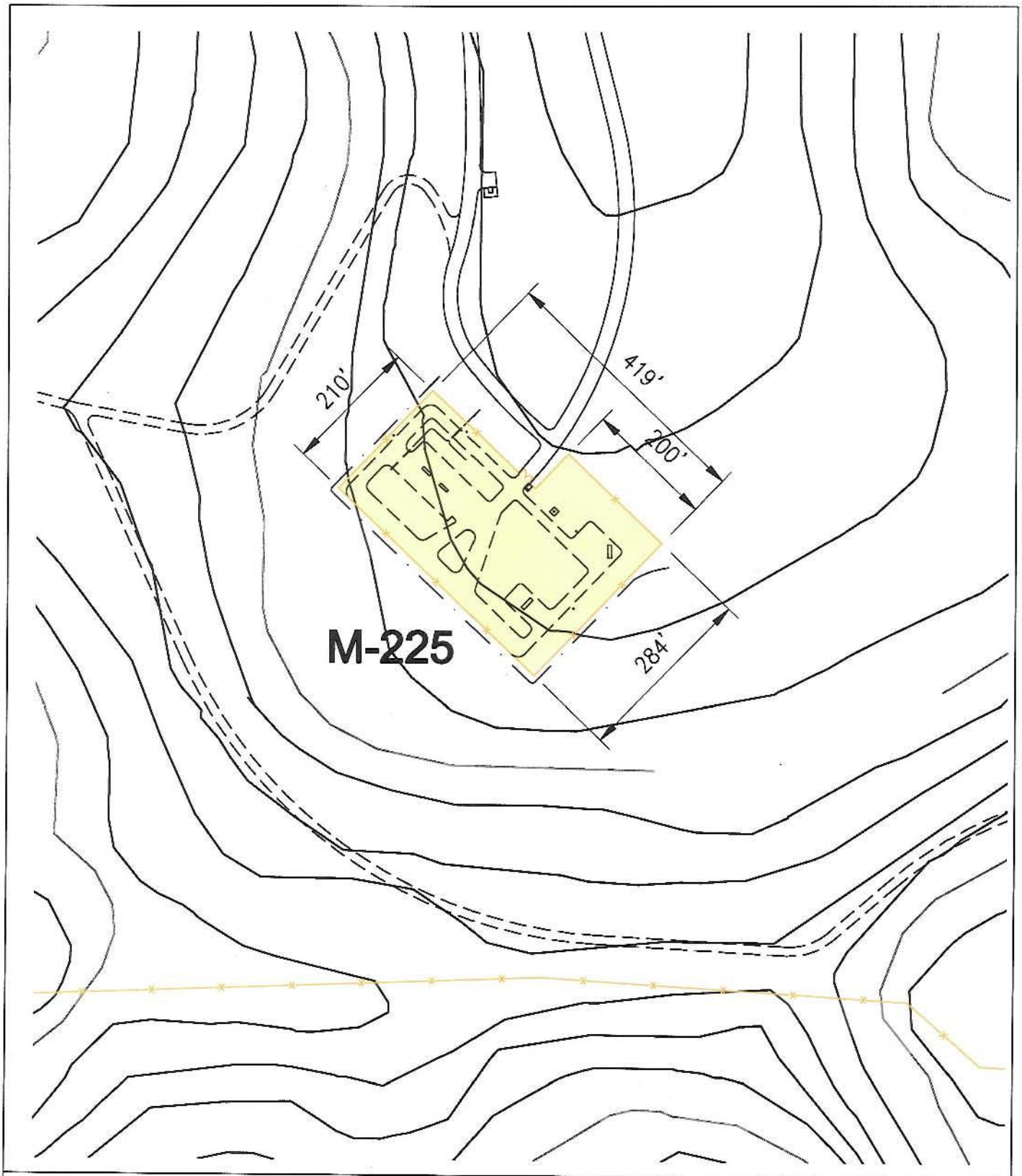

M-225 BURN GROUND
FACILITY LAYOUT
FIGURE I-1

N

SCALE: 1" = 200' - 0"±

Figure 6J

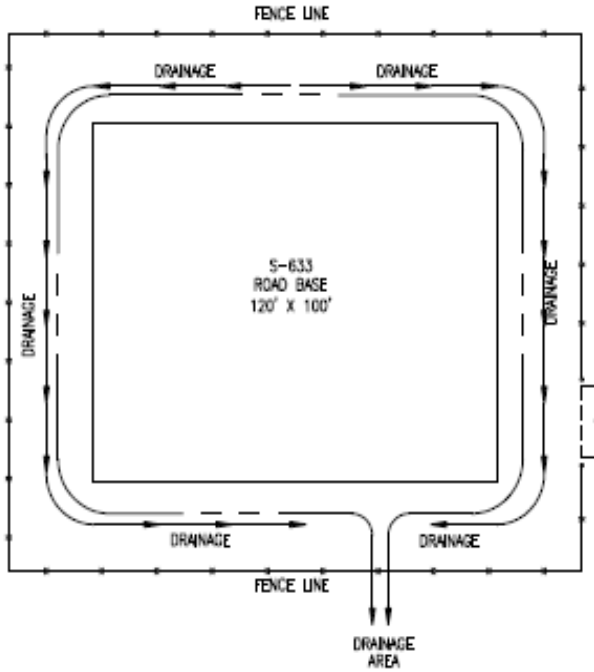

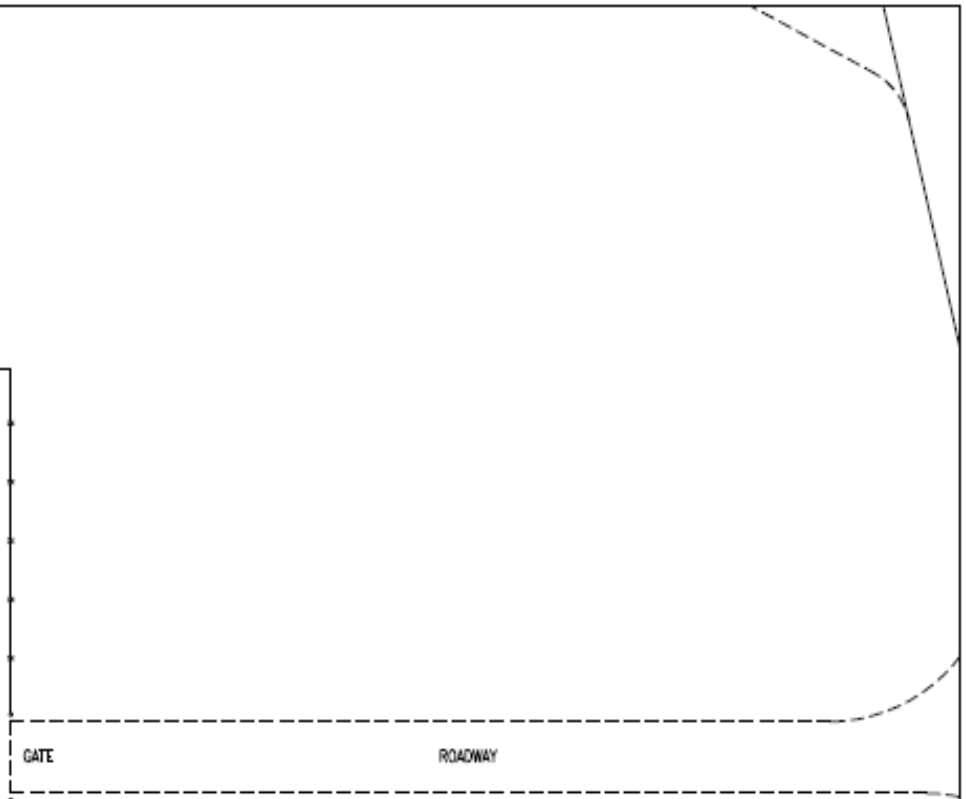

M225G4.DWG

ATK Launch Systems Inc.
FACILITIES ENGINEERING
P.O. Box 707 mc UT-B-M2
Brigham City, Utah 84302

S-633 STORAGE PAD

DWG. SIZE	SCALE	DRAWING NO.	REV.
	NONE	FIGURE J-1	