Attachment 1 - Design and Construction

Section le of the Permit Application

Performance Standard Compliance

The site is currently permitted as an E & P waste disposal facility and currently subject to the rules and standards contained within Utah State Administrative Code Section R315-303-2, and as a permitted E & P Waste Landfill the site will continue to adhere to these requirement.

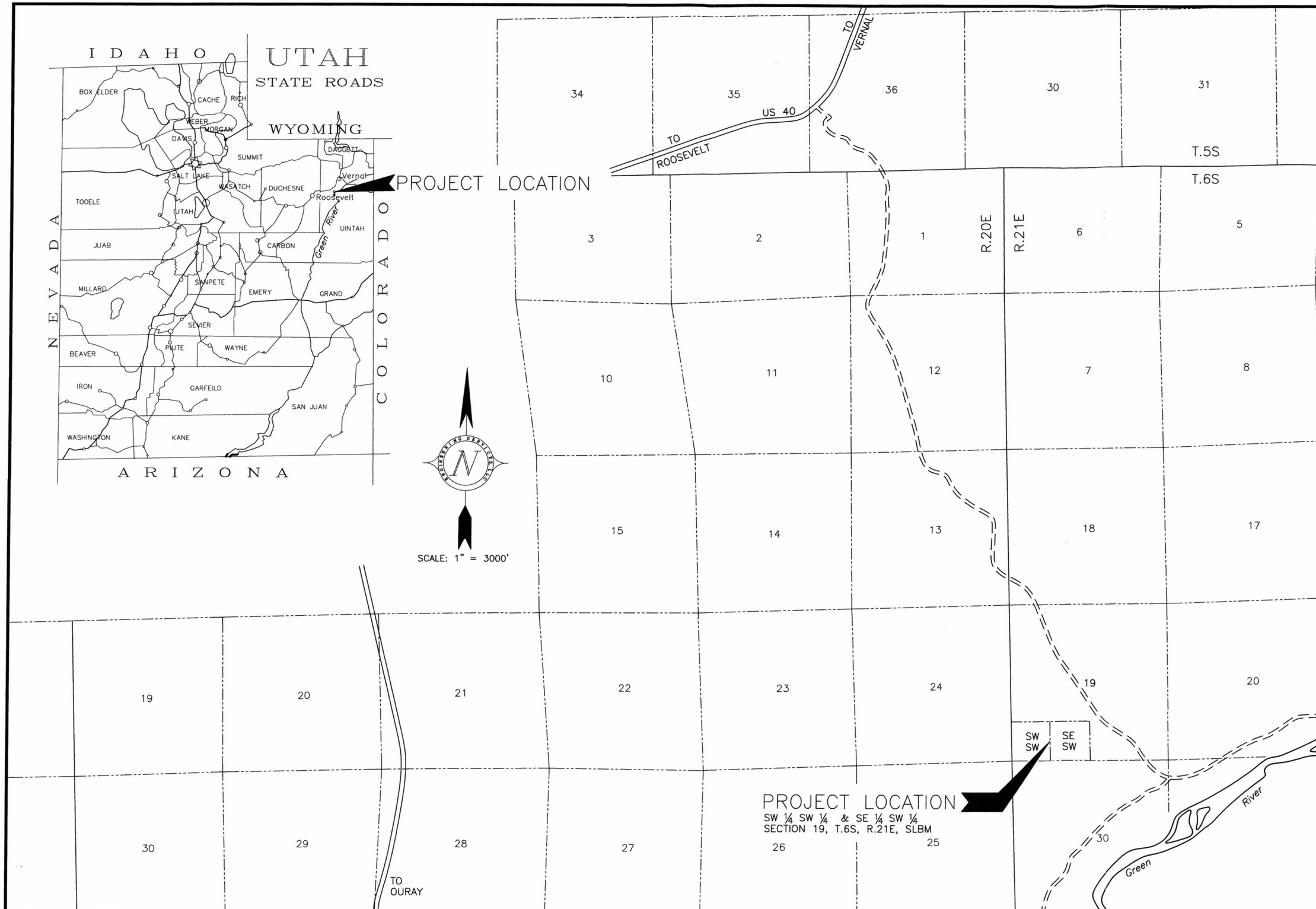

PATH\FILE: Z:\Projects\MISCELLANEOUS\Don DeMille\Location Vicinity Map (Revised 3-11-03).dwg DATE: 9/18/2002

SHEET 1 OF 4

ORIGINAL BY ____ DATE ____
REVISIONS
1 BY PAH DATE 3/11/03
2 BY ____ DATE ____
3 BY ____ DATE ____

Engineering Services, Inc.
P.O. Box 1485
Vernal, Utah 84078
(435) 781-2550

BRENNAN BOTTOM DISPOSAL
PRODUCED WATER
EVAPORATIVE PIT #4
UINTAH COUNTY

AREA AND VICINITY MAP

TANK SCHEDULE

1. RECEIVING TANK – 500 BBL
2. RECEIVING TANK – 500 BBL

DESIGN CRITERIA

POND 1
MAXIMUM WATER DEPTH – 8'
FREEBOARD – 2'
CAPACITY – 155,000 BBL (19.95 AF)

POND 2
MAXIMUM WATER DEPTH – 8'
FREEBOARD – 2'
CAPACITY – 155,000 BBL (19.95 AF)

POND 3
MAXIMUM WATER DEPTH – 8'
FREEBOARD – 2'
CAPACITY – 155,000 BBL (19.95 AF)

POND 4
MAXIMUM WATER DEPTH – 8'
FREEBOARD – 2'
CAPACITY – 155,000 BBL (19.95 AF)

ROUTE SURFACE WATER
ARROUND PONDS

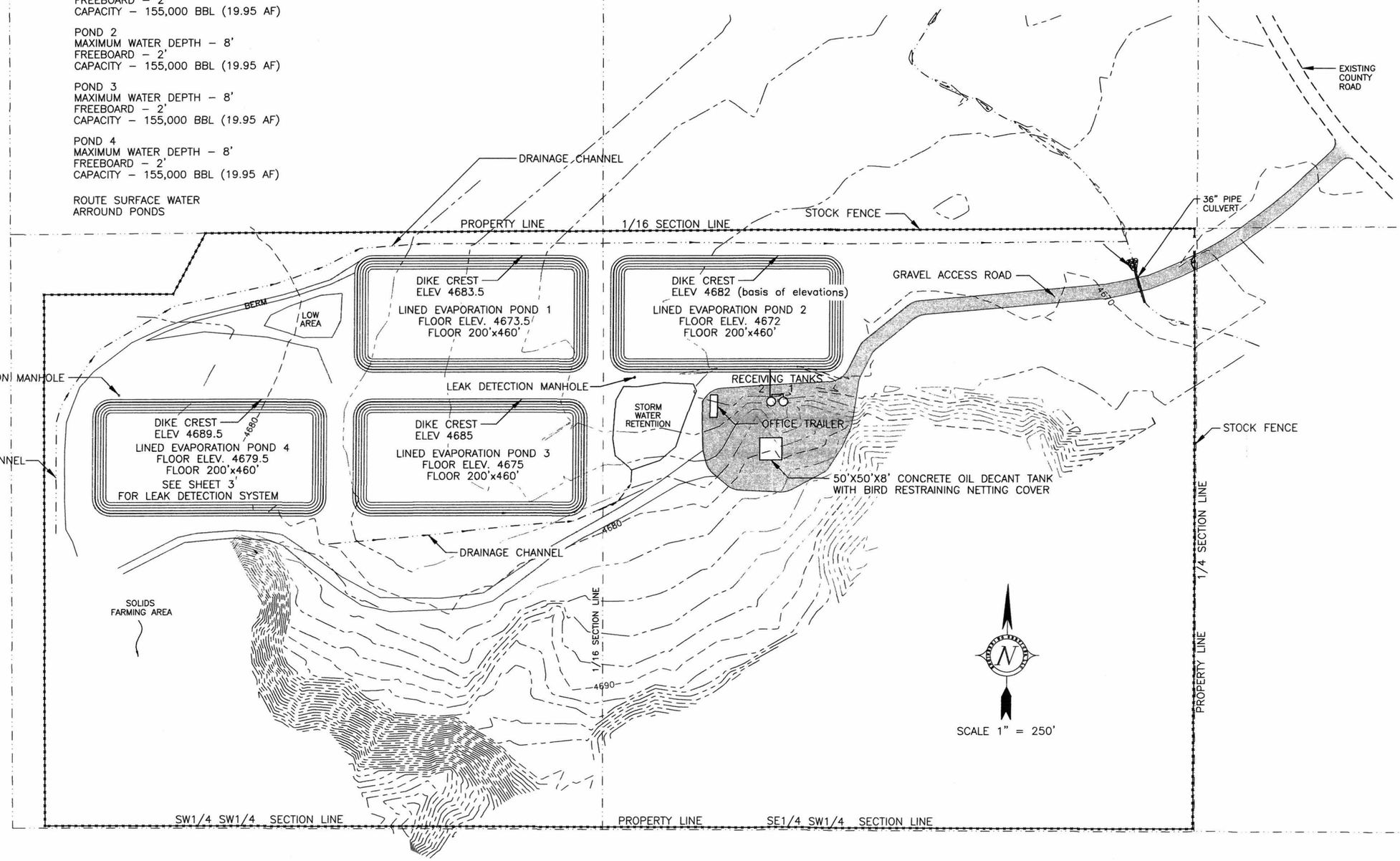

SHEET 2 OF 4

ORIGINAL
BY ____ DATE ____
REVISIONS
1 BY PAH DATE 3/11/03
2 BY ____ DATE ____
3 BY ____ DATE ____

Engineering Services, Inc.
P.O. Box 1485
Vernal, Utah 84078
(435) 781-2550

BRENNAN BOTTOM DISPOSAL
PRODUCED WATER
EVAPORATIVE PIT #4
UINTAH COUNTY

SITE PLAN

PATH\FILE: Z:\Projects\MISCELLANEOUS\Don DeMille\Section and Details (Revised 3-11-03).dwg DATE: 3/11/2003

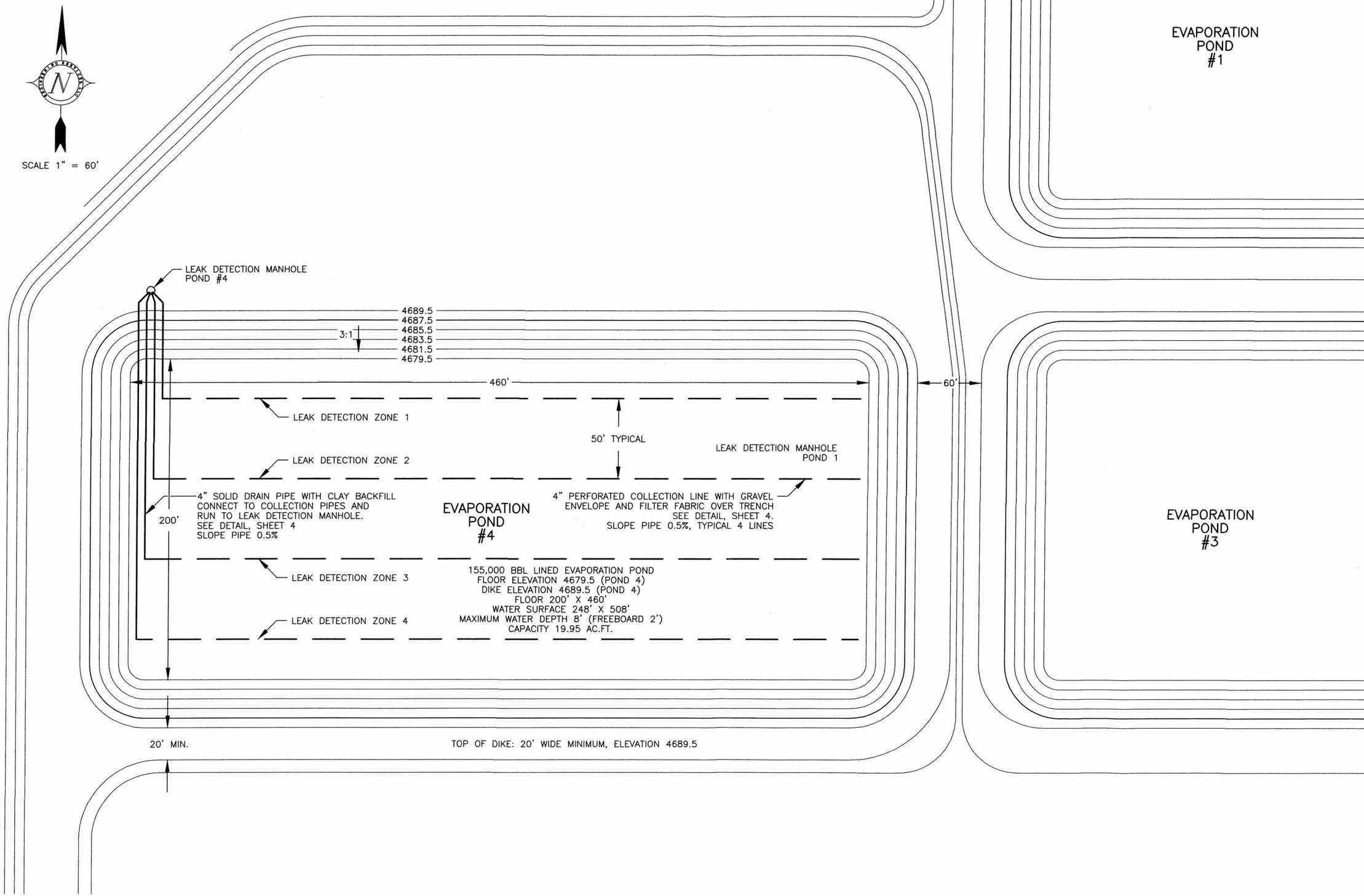

SHEET 3 OF 4

ORIGINAL BY ____ DATE ____

REVISIONS
1 BY PAH DATE 3/11/03
2 BY ____ DATE ____
3 BY ____ DATE ____

Engineering Services, Inc.
P.O. Box 1485
Vernal, Utah 84078
(435) 781-2550

BRENNAN BOTTOM DISPOSAL
PRODUCED WATER
EVAPORATIVE PIT #4
UINTAH COUNTY

POND PLAN

PATH\FILE: Z:\Projects\MISCELLANEOUS\Don DeMille\Pond Plan (Revised 3-11-03).dwg DATE: 3/11/2003

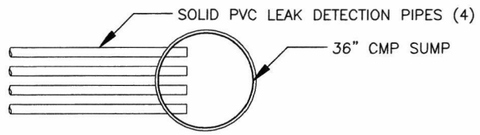

PLAN

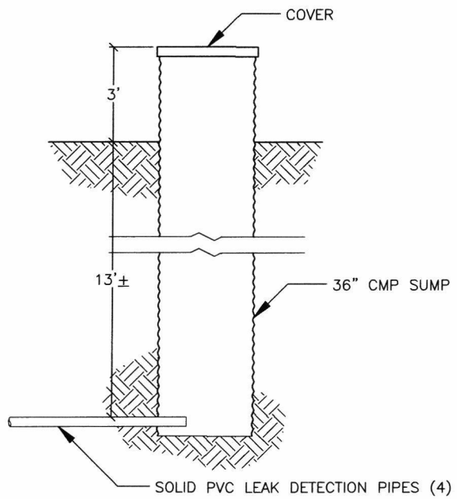

SECTION

LEAK DETECTION SUMP

NO SCALE

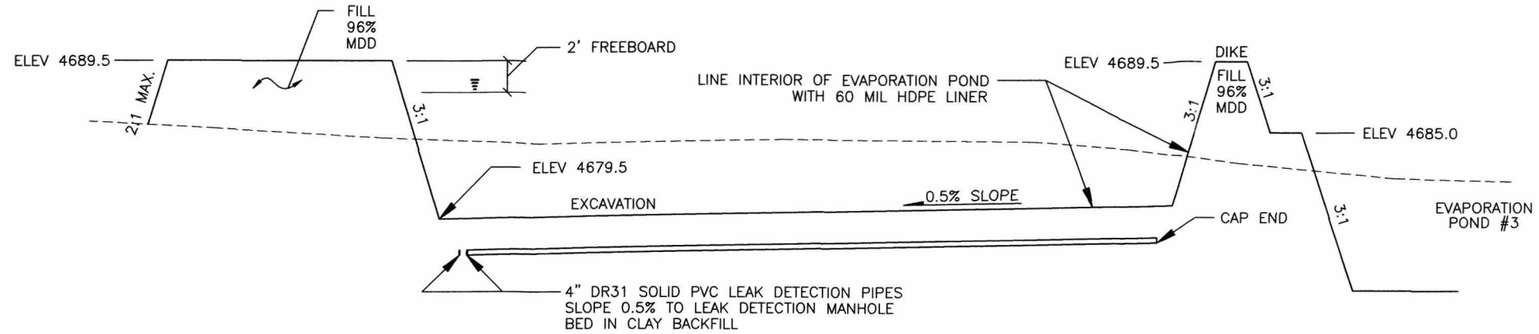

EVAPORATION POND #4 LONGITUDINAL SECTION

SCALE 1" = 100' HORIZONTAL
SCALE 1" = 10' VERTICAL

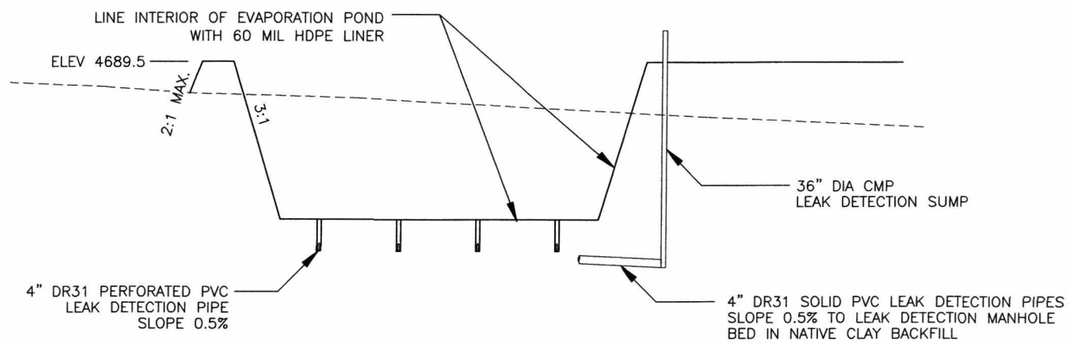

EVAPORATION POND #4 TRANSVERSE SECTION

SCALE 1" = 100' HORIZONTAL
SCALE 1" = 10' VERTICAL

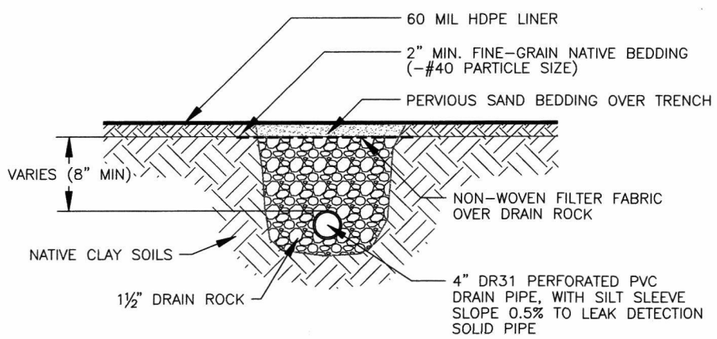

LEAK DETECTION COLLECTION PIPE

NO SCALE

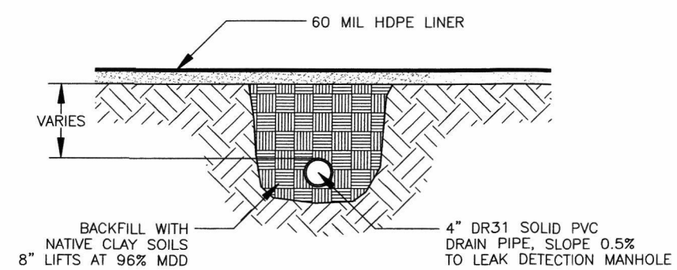

LEAK DETECTION SOLID PIPE

NO SCALE

SHEET 4 OF 4

ORIGINAL
BY _____ DATE _____
REVISIONS
1 BY PAH DATE 3/11/03
2 BY _____ DATE _____
3 BY _____ DATE _____

Engineering Services, Inc.
P.O. Box 1485
Vernal, Utah 84078
(435) 781-2550

BRENNAN BOTTOM DISPOSAL
PRODUCED WATER
EVAPORATIVE PIT #4
UINTAH COUNTY

SECTION AND DETAILS

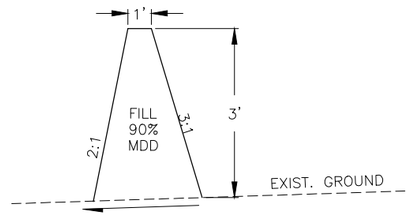

BERM DETAIL

NO SCALE

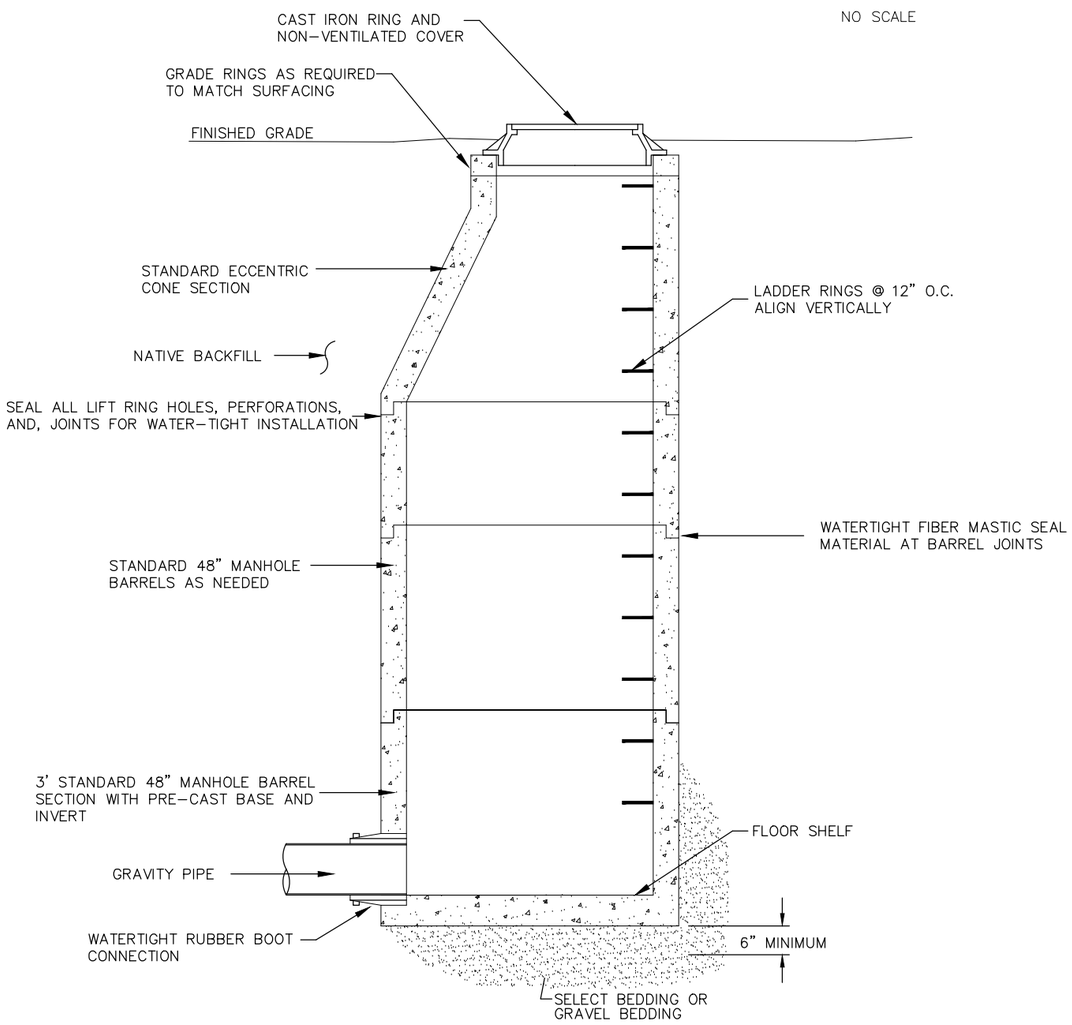

LEAK DETECTION MANHOLE

SCALE: NOT TO SCALE

SHEET 5 OF 5

ORIGINAL
BY ____ DATE ____
REVISIONS
1 BY ____ DATE ____
2 BY ____ DATE ____
3 BY ____ DATE ____

Engineering Services, Inc.
P.O. Box 1485
Vernal, Utah 84078
(435) 781-2550

DEMILLE
PRODUCED WATER
DISPOSAL FACILITY
UINTAH COUNTY

SECTION
AND
DETAILS

Attachment 2 – Plan of Operation

Waste Handling Procedures

Waste for the landfill is anticipated to be dried drilling mud that will be delivered to the site via dump truck. The material will be deposited in the landfill. The material will be watered periodically to prevent fugitive dust from leaving the site. Upon receiving any material for disposal, facility staff will inspect each load of drilling mud to ensure that it passes the paint filter test as well as to verify that no other waste is included in the load prior to disposal in the landfill area. The volume of each load along with date, time, source and type of material will be recorded. An example of the log that will be used for the facility is included in Appendix E.

Schedule of Construction

The proposed facility has already been constructed and was previously being used as a disposal pond for oil and gas exploration and production water. The pond has been drained and inspected for leaks in anticipation of approval of this application.

Inspections and Monitoring

The facility will be monitored regularly during hours of operation by onsite staff. Inspection of the leak detection system for the facility will be performed on a weekly basis. A sample inspection form used for all of the leak detection points for the facility is included in Appendix E.

Emergency Response Plan

In the event of a fire or explosion, staff will immediately evacuate the site and contact emergency response agencies and the facility owner. No waste will be accepted in the facility until it has been deemed safe to resume operation by both the local emergency response personnel and the Division of Solid and Hazardous Waste.

Dust Control and Watering

The landfill material will generally consist of drilling mud and will be watered periodically as needed to reduce the potential for dust contamination.

Litter Control

Since the landfill will only be accepting drilling mud, litter and wind blow debris will not be a concern.

Non-E & P Waste Procedures

Each load of material brought into the site for disposal will be inspected prior to dumping. Any load containing material that is deemed to be non-E & P waste will be rejected and directed to an approved landfill.

Alternative Waste Handling

In the event of a breakdown or other shutdown resulting in the facility being unable to accept waste, all incoming waste will be directed to an alternate facility permitted to accept that type of waste.

Site Operations Training Plan

Prior to beginning operation activities at the landfill site, new operators will be required to:

1. Review this application and the attached documentation
2. Receive safety and emergency response training
3. Receive training on proper evaluation and documentation of incoming waste
4. Receive instruction on inspection and documentation of leak detection and stormwater systems.

Brennan Bottoms Disposal

E&P Solid Waste Disposal Facility - Solid Waste Log

General Information				Waste Origin			
Date	Waste Type (Drilling Mud, Etc.)	Waste Quantity (Cu. Yds.)	Waste Quantity (Tons)	Waste Producer (Company Name)	Source Location (Well Pad #)	Waste Transporter (Company Name)	Facility Opperator (Initials)

WEEKLY LEAK DETECTION & INSPECTION REPORT

Date Inspected	Inspection Point or Pit Number																		Inspectors Name
	#1	#2	#3	#4	#5	#6	#7	#8	#9	#10	#11	#12	#13	#14	#15	#16	#17	#18	

* Inspection Codes:
D = Dry
W = Wet

Any water in the Leak Detection System Must Be Reported to the Division of Oil, Gas & Mining, within 24 Hours.

I the undersigned certify, to the best of my knowledge, that the information presented in this report is accurate, and reflects the actual observations at my facility.

Operator Signature_____ Date:_____

Failure to report quarterly could result in temporary or permanent closure of your facility.

lIb. Closure Requirements

Closure Plan

The closure for the facility will be in accordance with the requirements of section R315-302 of the Utah Administrative Code and will be done in such a way as to minimize the need for maintenance and the potential for contamination of the surrounding area. At the time of closure, the landfill area will be covered with 1.5 feet of compacted native sandy clay material meeting a permeability of less than 1×10^{-6} and sloped to prevent runoff from leaving the site. The landfill area will then be covered with 6 inches of native topsoil material and re-seeded with native vegetation. The existing liners and leak detection system will remain in place and be monitored on a monthly basis to verify that the landfill liner is intact.

Closure Schedule

It is anticipated that the landfill will remain in operation for approximately 5 to 10 years, at which point it will have reached its total capacity and be closed. This closure schedule is based on an estimated one load of material per day with a volume of 10 to 20 cubic yards. The owner will notify the Director of the Division of Solid Waste, 60 days prior to the projected final receipt of waste and the closure plan will be implemented within 30 days of receipt of final waste. Closure activities will be completed within 180 days of commencing. Following completion of the closure activities stamped and signed as-built plans will submitted to the Director.

Final Cover Design

At the time of closure, the landfill area will be covered with 1.5 feet of compacted native sandy clay material meeting a permeability of less than 1×10^{-6} and sloped to prevent runoff from leaving the site. The landfill area will then be covered with 6 inches of native topsoil material and re-seeded with native vegetation.

Facility Capacity

The total available volume in the landfill pit is 19.95 acre-ft or 32,186 cubic yards. This equates to approximately 55,000 tons.

Final Inspection

Following the facility closure, a final inspection will be scheduled with the Utah Division of Solid Waste and the Division of Oil, Gas and Mining personnel (see Closure Schedule above).

IIc. Post Closure Care

Post Closure Care Plan

Following the closure and final inspection the owner will perform monthly inspections of the site and perform any maintenance necessary to prevent contamination from leaving the site. The leak detection system will be left in place and monitored monthly to verify that the liner is still intact. The owner will also submit proof of filing for the recording of title to the Director in accordance with Utah State Administrative Code section R315-302-2(6).

Contact Information

The following individuals will be responsible for the maintenance of the facility:

Jim Nebeker,
JN Trucking,
4091 West 3000 South
Roosevelt, UT 84066
435-823-6116

Don DeMille
435-722-6724