SW 397
Division of
Solid and Hazardous Waste

Utah Exploration and Production Waste Landfill Permit Application Form

NOV 28 2014

2014-015701

Part I General Information APPLICANT: PLEASE COMPLETE ALL SECTIONS.

I. Application Type

- [x] New Application
- [ ] Renewal Application
- [ ] Facility Expansion
- [ ] Modification

For Renewal Applications, Facility Expansion Applications and Modifications Enter Current Permit Number _____

II. Facility Name and Location

Legal Name of Facility
Brennan Bottoms Disposal Facility

Site Address (street or directions to site)
3999 W. 12250 S. Twelve Mile Wash Road

County
Uintah

City Vernal | Zip Code 84078 | Telephone 435-722-6724

Township 6 S | Range 21E | Section(s) 19 | Quarter/Quarter Section SW/4 | Quarter Section SW/4

Main Gate Latitude 40 degrees 16 minutes 48.00 seconds | Longitude 109 degrees 35 minutes 58.04 seconds

III. Facility Owner(s) Information

Legal Name of Facility Owner
Brennan Bottoms Disposal, LLC

Address (mailing)
4091 West 3000 South

City Roosevelt | State UT | Zip Code 84066 | Telephone 435-823-6116

IV. Facility Operator(s) Information

Legal Name of Facility Operator
same as facility owner

Address (mailing)

City | State | Zip Code | Telephone

V. Property Owner(s) Information

Legal Name of Property Owner
same as facility owner

Address (mailing)

City | State | Zip Code | Telephone

VI. Contact Information

Owner Contact Jim Nebeker | Title Owner

Address (mailing)
4091 West 3000 South

City Roosevelt | State UT | Zip Code 84066 | Telephone 435-823-6116

Email Address jntrucking@ubtanet.com | Alternative Telephone (cell or other)

Operator Contact same as owner contact | Title

Address (mailing)

City | State | Zip Code | Telephone

Email Address | Alternative Telephone (cell or other)

Property Owner Contact same as owner contact | Title

Address (mailing)

City | State | Zip Code | Telephone

Utah Exploration and Production Waste Landfill Permit Application Form

Part I General Information (Continued)

VII. Facility Area

Facility Area..... 5.22 acres

Disposal Area..... 4.34 acres

Design Capacity

Years..... 10

Cubic Yards..... 32,186

Tons..... 55,000

VIII. Fee and Application Documents

Indicate Documents Attached To This Application

☒ Application Fee: $750.00

Review fees of $90.00 per hour apply to application review

☒ Facility Map or Maps ☒ Facility Legal Description ☒ Plan of Operation ☒ Waste Description
☒ Ground Water Report ☒ Closure Design ☒ Cost Estimates ☒ Financial Assurance

I HEREBY CERTIFY THAT THIS INFORMATION AND ALL ATTACHED PAGES ARE CORRECT AND COMPLETE.

Signature of Authorized Owner Representative Don DeMille Name typed or printed	Title: Owner Address	Date
Signature of Authorized Land Owner Representative (if applicable) Name typed or printed	Title Address	Date
Signature of Authorized Operator Representative (if applicable) Name typed or printed	Title Address	Date

Email Address jntrucking@ubtanet.com	Alternative Telephone (cell or other)	435-722-6724

Utah Exploration and Production Waste Landfill Permit Application Checklist

Important Note: The following checklist is for the permit application and addresses only the requirements of the Division of Solid and Hazardous Waste. Other federal, state, or local agencies may have requirements that the facility must meet. The applicant is responsible to be informed of, and meet, any applicable requirements. Examples of these requirements may include obtaining a conditional use permit, a business license, or a storm water permit. The applicant is reminded that obtaining a permit under the *Solid Waste Permitting and Management Rules* does not exempt the facility from these other requirements.

An application for a permit to construct and operate a landfill is the documentation that the landfill will be located, designed, constructed, operated, and closed in compliance with the requirements of Rules R315-301 through 320 of the *Utah Solid Waste Permitting and Management Rules* and the *Utah Solid and Hazardous Waste Act* (UCA 19-6-101 through 123). The application should be written to be understandable by regulatory agencies, landfill operators, and the general public. The application should also be written so that the landfill operator, after reading it, will be able to operate the landfill according to the requirements with a minimum of additional training.

Copies of the *Solid Waste Permitting and Management Rules*, the *Utah Solid and Hazardous Waste Act*, along with many other useful guidance documents can be obtained by contacting the Division of Solid and Hazardous Waste at 801-536-0200. Most of these documents are available on the Division's web page at www.hazardouswaste.utah.gov. Guidance documents can be found at the solid waste section portion of the web page.

When the Director has determined that the application is complete, submit two copies of the application as determined complete by the Director, and an electronic copy of the application.

Division of
Solid and Hazardous Waste

NOV 2 8 2014

2014-015701

APPLICATION TO PERMIT AN EXISTING LANDFARM AS AN EXPLORATION AND PRODUCTION LANDFILL

BRENNAN BOTTOMS DISPOSAL FACILITY

AT TWELVE MILE WASH
UINTAH COUNTY, UTAH

PREPARED FOR

BRENNAN BOTTOMS DISPOSAL (BBD)

November, 2014

CALDWELL
RICHARDS
SORENSEN

2028 West 500 North
P.O. Box 1485
Vernal, UT 84078

Phone: 435.781.2550
Fax: 435.781.2950

crsengineers.com

APPLICATION TABLE OF CONTENTS

INTRODUCTION 1

I. FACILITY GENERAL INFORMATION 1

Ia. General Information 1

Ib. General Information – New Class III Landfills 2

Ic. Location Standards For New E & P Landfills 2

Id. Geohydrological Assessment 4

Ie. Engineering Reports 5

If. Plan of Operation 5

II. FACILITY TECHNICAL INFORMATION 7

IIa. Facility Maps 7

IIb. Closure Requirements 7

IIc. Post Closure Care 8

IId. Financial Assurance 8

III. Conclusion 8

Figures

Figure 1 – Site Soils and Geology 3

Exhibits

Exhibit 1 FEMA FIRM Map

Exhibit 2 Site Plan And Topography

Exhibit 3 USGS Topo Map

Appendices

Appendix A - Proof of Ownership and Non-commercial Certification

Appendix B - Notification to Adjacent Property Owners

Appendix C - AGEC Geotechnical Report

Appendix D - DOGM Approval Letter and Original Pond Design Plans

Appendix E - Solid Waste Log and Leak Detection System Inspection Log

Appendix F - Closure Costs and Bonding

INTRODUCTION

Brennan Bottoms Disposal (BBD) proposes to drain one of their existing disposal ponds and permit it as an Exploration and Production Waste Landfill. The proposed landfill location is in the Brennan Bottoms Disposal Facility located in Twelve Mile Wash in Uintah County. The site currently operates several disposal ponds and a landfarm. This document is included with the application and outlines the existing location, geography and geology of the site as well as the proposed operation procedures and closure/post closure plans for the project.

I. FACILITY GENERAL INFORMATION

Ia. General Information

General Facility Description

The facility is located near a drainage known as Twelve Mile Wash south of Vernal, Utah in Uintah County (See Sheet 1 in Appendix D). The land is owned by Brenan Bottoms Disposal (BBD) and is surrounded by Uintah County lands. Local vegetation includes sagebrush, greasewood, juniper and native grasses and weeds. Wildlife in the area includes birds, coyotes, rodents, raptors, deer, antelope, reptiles and other species indigenous to the dry climate and available vegetation.

The site currently contains several disposal ponds permitted by the Utah Division of Oil, Gas and Mining (UDOGM) and one permitted land farm area with a second land farm area application under review by the UDOGM.

This landfill application is for the existing disposal pond #4 to be drained and permitted as a Class IIIB Exploration and Production (E & P) landfill, in order to allow the site to accept drilling mud.

Legal Description

The following are the legal descriptions for the two parcels containing the existing facilities and proposed landfill:

East Parcel - LOT 4 (SW/4 SW/4) AND SE/4 SW/4; SEC 19,T 6 S,R 21 E; S L M. CONT. 79.86 ACRES, M/L.

West Parcel – E 1/2, SE 1/4; AND SW 1/4, SE 1/4 SEC. 24, T 6 S, R 20 E, S.L.M. CONT. 120 ACRES.

Proof of Ownership and Non-Commercial Certification

Included in **Appendix A** are the following items:

1. Proof of ownership for the above reference parcels
2. A letter from the owner certifying the landfill is not a commercial facility and will only be accepting exploration and production wastes.

Waste Type and Anticipated Volume

The anticipated waste type for the landfill is drilling mud from oil and gas exploration activities and other materials currently being land farmed at the location. The anticipated daily volume of material to be accepted for disposal is 10 to 20 cubic yards.

Ib. General Information – New Class III Landfills

Historical Survey Requirements

The site is currently used for E & P waste disposal activities and has meet the historical survey requirements.

Nearby Property Owners

Only two property owners existing within 1000 feet of the facility boundary:

1. Uintah County, 152 East 100 North, Vernal, Utah 84078.
2. Indian Trail Ranch LLC, 621 Vista View Court, Salt Lake City, Utah 84054 (to the south near the Green River)

Copies of letters to both property owners are included in Appendix B.

Local Government Jurisdiction

Uintah County is the local government entity with jurisdiction over the site.

Ic. Location Standards For New E & P Landfills

Geology

The site does not contain any geologic hazards such as faults or unstable soils. Twelve Mile Wash is a relatively flat drainage part of the Green River drainage basin. Surface soils are a weathered sedimentary material composed of silt-sized particles, light tan-brown in color, with very little natural erosion. The surface formation is the Uinta Formation and Quaternary alluvium derived from the Uinta and Duchesne River Formations. The Uinta Formation is comprised of inter-bedding sandstones, siltstones and shale. The sandstones are lenticular and discontinuous and do not generally make good aquifers. The Quaternary alluvium is mostly fine-grained material with scattered sandstone and siltstone fragments.

A geotechnical engineering alluvial sediment sampling survey was previously conducted to characterize the properties of the substrate. The report characterizes the sediments in the area as silty, fine to coarse sand, sandy silt and high density sand. Associated sieve analyses of the samples and test boring field notes reported gravel beds in some areas of the facility. The percolation test for the site indicated that the soils allowed 2.5 to 6 inches of water to exit the hole in the first half hour,

and another 2-3 inches in the next half hour. Measures to slow the percolation rate, in the disposal pond that will be used for the landfill, have been taken by including a geo-membrane primary liner and a secondary clay liner consisting of 8 inches of bentonite clay in the bottom of the pond. Figure 1 below shows the geologic and soils information for the site and surrounding area.

The facility is located in the large, relatively flat drainage known as Twelve Mile Wash, which carries seasonal and intermittent runoff. The land slopes gently toward the southeast to the Green River, approximately 0.5 miles away. Measures have been taken to ensure stormwater does not enter the wash or subsequently the river. Preventative measures including berms, channels and clay and synthetic liners.

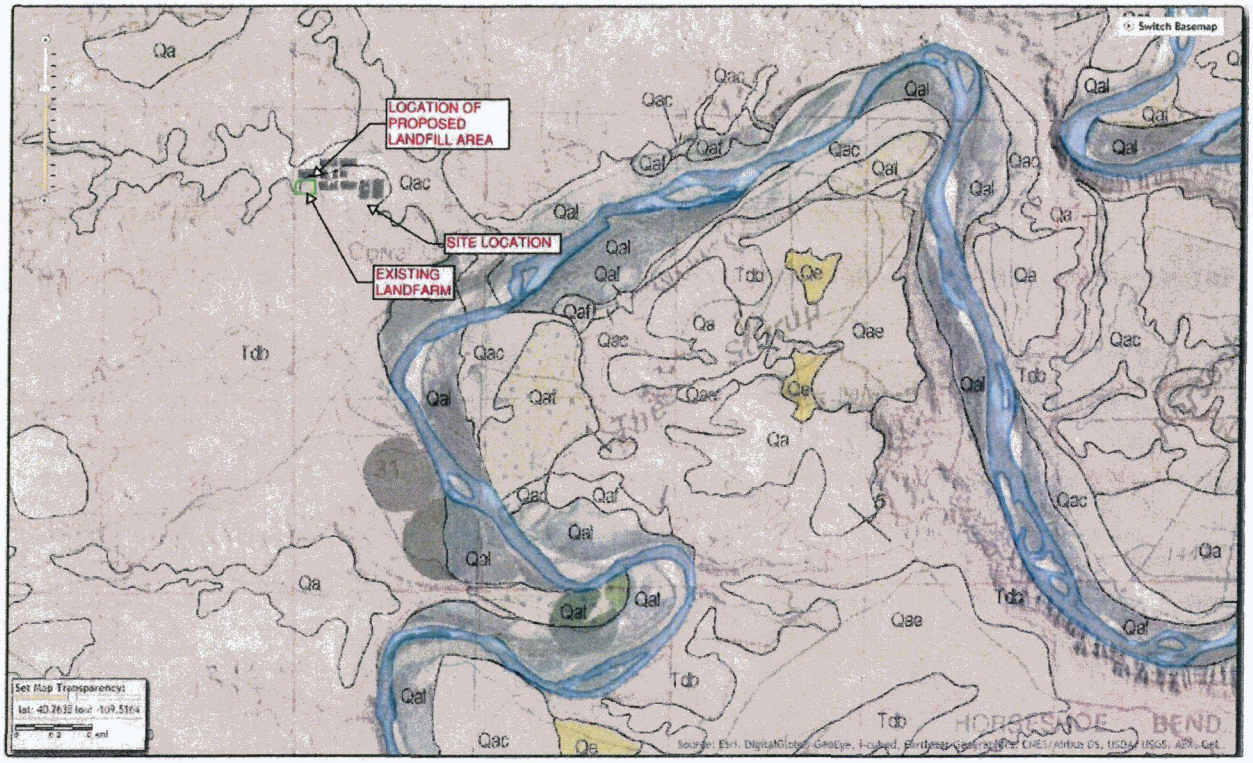

Figure 1 – Site Soils and Geology

Several oil wells are located within a one-mile radius of the facility including: Hot Rod Oil's Gose Govt 1 (43-047-20171) well, located northeast of the facility, Newfield's LCK 30-1-H (43-047-31588), Federal 5-19-6-21 (43-047-37559), and Federal 6-30-6-21(43-047-37560). Other wells are located southeast, north, and south of the facility, respectively. Access roads and well pads have not been detrimentally impacted by the facility operations and should remain un-impacted as a result of construction and operation of the proposed landfill.

Surface Water

The National Oceanic and Atmospheric Administration (NOAA) Atlas 14 indicates that the expected precipitation during the 25 year and 100 year 24 hour storm events is 1.68 and 2.15 inches respectively. Average annual rainfall for the area is 14 inches per year.

Floodplains

The FEMA FIRM map number 49047C0875D is included as Exhibit 1 and lists the proposed site as being in flood Zone A. Zone A indicates an area that has a potential for flooding, but no flood elevation was determined. Because no actual elevation was determined, it is difficult to determine what part of the area would actually be in the flood plain during a 100 year event. The pond that is proposed for the landfill site, was constructed above the adjacent dry wash by approximately 10 feet in order to meet the requirements for prevention of contamination from the disposal ponds. The site has been constructed so that enough freeboard exists that the 100 year event will not affect the proposed landfill.

Wetlands

The landfill site and surrounding area are very arid and do not contain the hydrology, soils or plant life necessary to produce or maintain any wetlands.

Ground Water

Several geotechinical bore holes were drilled up to 50 feet in depth within the proposed footprint and surrounding area of the proposed landfarm to determine depth to groundwater and the soil profile. Water was not encounter at any point in any of the holes. A copy of the geotechnical testing data and sample logs are included in Appendix C. Based on this information it is clear that the lowest level of the land fill is well over 10 feet above the groundwater table.

Site Map

The existing disposal ponds and landfarm site cover all of the area surrounding the proposed landfill. No other uses exist within 1000 feet. A map of the site and the existing topography is included in Exhibit 2.

Endangered Species, Ecological and Scientific Areas

The proposed landfill is located in an established disposal facility. No endangered species, ecological or scientifically significant areas are present in the site.

Id. Geohydrological Assessment

Local Geology

Figure 1 shows the soils and geologic features for the site and surrounding area.Based on the information obtained from the geotechnical borings and tested soil samples (described above), it can reasonably be assumed that the soils in the area represent a relatively uniform layer of lean clay inlayered with silty clay and clayey silt, homogeneous clay, silt and sand. Permeability coefficients for the tested samples resulted in a permeability ranging from 3.5×10^{-6} to 2.2×10^{-7}.

Groundwater

Since no groundwater was present, no evaluation could be made regarding direction of groundwater flow or flow rate.

A search of the Utah Division of Water Rights listing of points of diversion showed that there are no private or public water wells on site or within 2,000 feet of the proposed landfill.

Surface Waters

Surface waters in the area consist of seasonal and intermittent flows in Twelve Mile Wash directly adjacent to the site and the Green River approximately half a mile to the southeast of the site. Twelve Mile Wash flows water during early spring melt and during major rain events, but for the majority of the year is dry, the Green River is a tributary to the Colorado River and flows year round.

Since no ground water or surface water is present on or adjacent to the site, a background assessment and water quality monitoring was not necessary and was not prepared for this application.

Ie. Engineering Reports

Performance Standard Compliance

The site is currently permitted as an E & P waste disposal facility and currently subject to the rules and standards contained within Utah State Administrative Code Section R315-303-2, and as a permitted E & P Waste Landfill the site will continue to adhere to these requirement.

The following engineering reports and drawings are including in the Appendices:

AGEC Geotechnical Report – Appendix C

Original Pond Design Plans– Appendix D

A copy of the letter of approval for the site as a disposal pond from the Department of Oil, Gas and Mining along with the original design documents detailing the liner, leak detection system, and stormwater management is included in Appendix D.

If. Plan of Operation

Waste Handling Procedures

Waste for the landfill is anticipated to be dried drilling mud that will be delivered to the site via dump truck. The material will be deposited in the landfill. The material will be watered periodically to prevent fugitive dust from leaving the site. Upon receiving any material for disposal, facility staff will inspect each load of drilling mud to ensure that it passes the paint filter test as well as to verify that no other waste is included in the load prior to disposal in the landfill area. The volume of each load along

with date, time, source and type of material will be recorded. An example of the log that will be used for the facility is included in Appendix E.

Schedule of Construction

The proposed facility has already been constructed and was previously being used as a disposal pond for oil and gas exploration and production water. The pond has been drained and inspected for leaks in anticipation of approval of this application.

Inspections and Monitoring

The facility will be monitored regularly during hours of operation by onsite staff. Inspection of the leak detection system for the facility will be performed on a weekly basis. A sample inspection form used for all of the leak detection points for the facility is included in Appendix E.

Emergency Response Plan

In the event of a fire or explosion, staff will immediately evacuate the site and contact emergency response agencies and the facility owner. No waste will be accepted in the facility until it has been deemed safe to resume operation by both the local emergency response personnel and the Division of Solid Waste.

Dust Control and Watering

The landfill material will generally consist of drilling mud and will be watered periodically as needed to reduce the potential for dust contamination.

Litter Control

Since the landfill will only be accepting drilling mud, litter and wind blow debris will not be a concern.

Non-E & P Waste Procedures

Each load of material brought into the site for disposal will be inspected prior to dumping. Any load containing material that is deemed to be non-E & P waste will be rejected and directed to an approved landfill.

Alternative Waste Handling

In the event of a breakdown or other shutdown resulting in the facility being unable to accept waste, all incoming waste will be directed to an alternate facility permitted to accept that type of waste.

Site Operations Training Plan

Prior to beginning operation activities at the landfill site, new operators will be required to:

1. Review this application and the attached documentation
2. Receive safety and emergency response training
3. Receive training on proper evaluation and documentation of incoming waste
4. Receive instruction on inspection and documentation of leak detection and stormwater systems.

II. FACILITY TECHNICAL INFORMATION

IIa. Facility Maps

The existing facility has been in operation since 2003. Operations currently include a) the evaporation of produced water delivered to the site and stored in HDPE lined disposal ponds and b) treatment of petroleum contaminated soils at the existing 3 acre landfarm. A topographic map of the existing site is included in Exhibit 2 and the U.S.G.S. topo map for the area is included in Exhibit 3.

IIb. Closure Requirements

Closure Plan

The closure for the facility will be in accordance with the requirements of section R315-302 of the Utah Administrative Code and will be done in such a way as to minimize the need for maintenance and the potential for contamination of the surrounding area. At the time of closure, the landfill area will be covered with 1.5 feet of compacted native sandy clay material meeting a permeability of less than $1x10^{-6}$ and sloped to prevent runoff from leaving the site. The landfill area will then be covered with 6 inches of native topsoil material and re-seeded with native vegetation. The existing liners and leak detection system will remain in place and be monitored on a monthly basis to verify that the landfill liner is intact.

Closure Schedule

It is anticipated that the landfill will remain in operation for approximately 5 to 10 years, at which point it will have reached its total capacity and be closed. This closure schedule is based on an estimated one load of material per day with a volume of 10 to 20 cubic yards. The owner will notify the Director of the Division of Solid Waste, 60 days prior to the projected final receipt of waste and the closure plan will be implemented within 30 days of receipt of final waste. Closure activities will be completed within 180 days of commencing. Following completion of the closure activities stamped and signed as-built plans will submitted to the Director.

Final Cover Design

At the time of closure, the landfill area will be covered with 1.5 feet of compacted native sandy clay material meeting a permeability of less than $1x10^{-6}$ and sloped to prevent runoff from leaving the site. The landfill area will then be covered with 6 inches of native topsoil material and re-seeded with native vegetation.

Facility Capacity

The total available volume in the landfill pit is 19.95 acre-ft or 32,186 cubic yards. This equates to approximately 55,000 tons.

Final Inspection

Following the facility closure, a final inspection will be scheduled with the Utah Division of Solid Waste and the Division of Oil, Gas and Mining personnel (see Closure Schedule above).

IIc. Post Closure Care

Post Closure Care Plan

Following the closure and final inspection the owner will perform monthly inspections of the site and perform any maintenance necessary to prevent contamination from leaving the site. The leak detection system will be left in place and monitored monthly to verify that the liner is still intact. The owner will also submit proof of filing for the recording of title to the Director in accordance with Utah State Administrative Code section R315-302-2(6).

Contact Information

The following individuals will be responsible for the maintenance of the facility:

Jim Nebeker,
JN Trucking,
4091 West 3000 South
Roosevelt, UT 84066
435-823-6116

Don DeMille
435-722-6724

IId. Financial Assurance

Closure Costs

The landfill is very small and therefore will not require significant cost for closure and maintenance. The cost of placing the cap, re-vegetating the area and performing periodic inspections and maintenance is estimated at $9,107. See cost breakdown in Appendix F

Financial Assurance

The landfill is part of a larger operation and is included in the closure bond for the overall disposal ponds and landfarm. A copy of the closure bond is included in Appendix F.

III. Conclusion

The proposed landfill site is part of an existing E & P Disposal and Landfarming site and has already been constructed and approved as a disposal pond by the DOGM. This application would allow the pond to be used as a landfill for the purpose of accepting drilling mud from E & P activities and is consistent with other, currently permitted, facilities in the area.

Exhibits

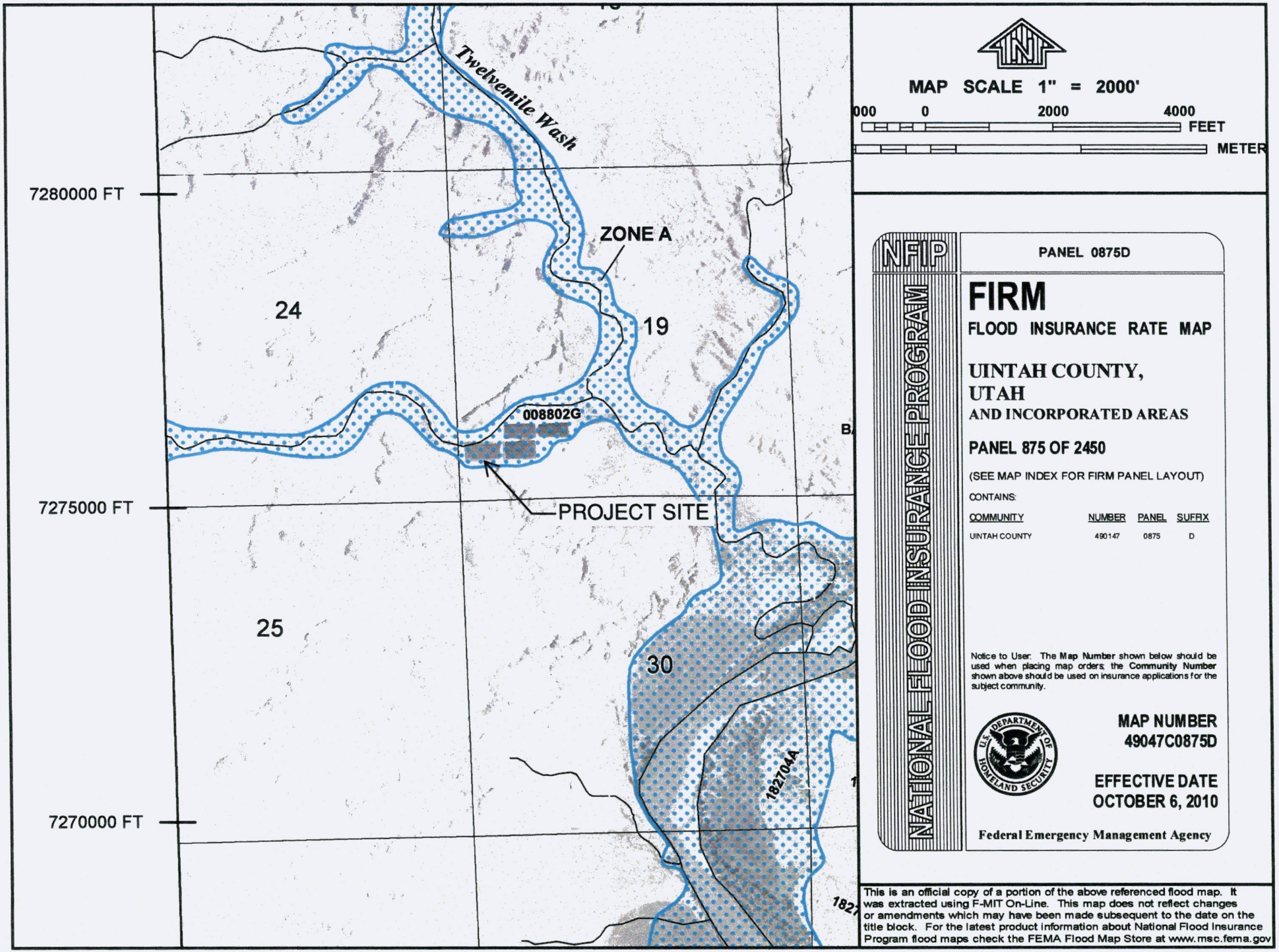

FIMA FIRM Map - Exhibit 1

N

0 200' 400'

4800
4775
4750
4725
4775
4750
4730
4735
4740
SECONDARY CONTAINMENT

EXISTING EVAPORATION POND

EXISTING EVAPORATION POND

EXISTING EVAPORATION POND TO BE DRAINED AND USED FOR LANDFILL

EXISTING EVAPORATION POND

EXISTING EVAPORATION POND

UNLOADING AND SEPARATOR AREA

4730
4740

EXISTING EVAPORATION POND

EXISTING EVAPORATION POND

EXISTING EVAPORATION POND

EXISTING EVAPORATION POND

4750
4775
4800

NOTES

GROUND WATER MONITORING WELLS WERE NOT NECESSARY ON SITE DUE TO ABSENCE OF GROUND WATER AND LOW SOIL CONDUCTIVITY.

RECORD OF REVISIONS

0 1 2

IF THE ABOVE SCALE BAR DOES NOT MEASURE 1-INCH IN LENGTH, DO NOT USE THIS DRAWING FOR SCALING PURPOSES. DIMENSIONS AND MEASUREMENTS SPECIFIED IN THE DRAWING TAKE PRECEDENCE TO SCALED MEASUREMENTS.

THE INFORMATION CONTAINED IN THIS DRAWING IS THE PROPERTY OF *CRS ENGINEERS* AND IS NOT TO BE REPRODUCED, MODIFIED OR USED FOR ANY OTHER PROJECT OR EXTENSION OF THIS PROJECT EXCEPT BY AGREEMENT WITH *CRS ENGINEERS*.
© 2014

PRINCIPAL: D. ANDERSON
PROJECT MANAGER: C. ALLEN
CHECKED BY: K. DESPAIN
DRAWN BY: C. ALLEN
DRAWING SCALE: SEE DRAWING
ISSUE DATE: NOVEMBER 2014

CALDWELL RICHARDS SORENSEN
ANSWERS TO INFRASTRUCTURE

Vernal Office:
2028 WEST 500 NORTH
VERNAL, UTAH 84078
PHONE: 435 . 781 . 2550

www.crsengineers.com

BRENNAN BOTTOMS DISPOSAL
LANDFILL APPLICATION
EXISTING TOPOGRAPHY

12 MILE WASH UTAH

STAMP

PROJECT NUMBER: 14120V
SHEET 1 OF 1
SHEET NUMBER: EXHIBIT-2

File Path=P:\14120V Brennan-BBD Land Farm 2014\Drawings\EXISTING TOPO.dwg Nov 13, 2014 - 4:25pm

USGS TOPO - EXHIBIT 3

Appendix A

Basin Land Title & Abstract, Inc.
865 East 200 North (112-5)
Roosevelt, UT 84066
File Number 14,847
07-015-0001
07-016-0001
07-023-0002

Entry 2009007899
Book 1156 Page 312

WARRANTY DEED

Don DeMille and Linda DeMille,
Bruce Barns and Joyce Barns,
of Ballard, County of Uintah, State of Utah,
GRANTOR(S)
hereby CONVEY(S) and WARRANT(S) to
Brennon Bottem Disposal, L.L.C.,
A Utah limited liability company
GRANTEE(S)

of Route 2 Box 2060, Roosevelt, UT 84066 for the sum of ---TEN--- Dollars and other good and valuable consideration, the following described tract of land in UINTAH County, State of Utah:

TOWNSHIP 6 SOUTH, RANGE 20 EAST, SALT LAKE MERIDIAN

Section 23: The Southeast quarter of the Southeast quarter.
Section 24: The Southwest quarter; the Northwest quarter of the Southeast quarter.

TOWNSHIP 6 SOUTH, RANGE 21 EAST, SALT LAKE MERIDIAN

Section 19: Lot 4 (Southwest quarter of the Southwest quarter); the Southeast quarter of the Southwest quarter.

TOGETHER with all improvements and appurtenances thereunto belonging.
SUBJECT to all existing easements and rights-of-way.
EXCEPTING therefrom all oil, gas, and mineral rights.

Witness the hands of said grantor(s) this 20th day of July, 2009.

Entry 2009007899
Book 1156 Page 312-314 $16.00
30-JUL-09 02:58
RANDY SIMMONS
RECORDER, UINTAH COUNTY, UTAH
BRENNON BOTTEM DISPOSAL LLC
RT 2 BOX 2060 ROOSEVEL UT 84066
Rec By: SYLENE ACCUTTOROOP , DEPUTY

Entry 2009007899
Book 1156 Page 313

Don DeMille

Linda Demille

STATE OF UTAH)
ss
COUNTY OF DUCHESNE)

On the 20th day of July, 2009 personally appeared before me, **Don DeMille and Linda DeMille, Husband and Wife,** the signers of the within instrument who duly acknowledged to me that they executed the same.

Notary Public
JOHN D. OBERHANSLY
985 East 200 North (112-6)
Roosevelt, Utah 84066
My Commission Expires
March 12, 2011
State of Utah

Notary Public
Roosevelt, UT 84066

Entry 2009007899
Book 1156 Page 214

Bruce Barns
Bruce Barns

Joyce Barns
Joyce Barns

STATE OF ~~COLORADO~~ Utah)
ss
COUNTY OF Duchesne)

On the 21st day of July, 2009 personally appeared before me, **Bruce Barns and Joyce Barns, *Husband and Wife,*** the signers of the within instrument who duly acknowledged to me that they executed the same.

Notary Public
JOHN D. OBERHANSLY
885 East 200 North (112-5)
Roosevelt, Utah 84066
My Commission Expires
March 12, 2011
State of Utah

John D. Oberhansly
Notary Public

October 15, 2014

To whom it may concern:

From: Brennan Bottom Disposal

RE: Item 1a-5 Definition of landfill

Dear Sir,

The landfill at Brennan Bottom Disposal will only accept exploration and production waste. No waste that is consistent with a commercial landfill (household garbage) will be accepted. Signs will be posted at the facility and all operators will be instructed to follow these procedure.

Sincerely,

Don Demille

Brennan Bottom Disposal

Appendix B

CALDWELL
RICHARDS
SORENSEN
Answers to Infrastructure®

2028 West 500 North
P.O. Box 1485
Vernal, UT 84078

Phone: 435.781.2550
Fax: 435.781.2950

crsengineers.com

November 12, 2014

Indian Trail Ranch LLC
621 Vista View Court
Salt Lake City, Utah 84054

Re: Brennan Bottoms Disposal – Exploration and Production Waste Landfill Application

To Whom It May Concern:

Brennan Bottoms Disposal, in accordance with section R315-310-3(2)ii of the Utah administrative code, is providing this letter as notice that it intends to submit an application to the Utah Division of Solid Waste for a permit to convert one of their existing liquid disposal ponds into an approved Exploration and Production (E&P) Waste Landfill. You are receiving this notice because you have been identified as owning property adjacent to the proposed site.

The purpose of the E&P Waste Landfill application is to allow the facility to accept dewatered drilling mud from energy exploration and production activities and deposit it in a lined pond. The proposed facility is located at 3999 W 12250 S Twelve Mile Wash Rd which is in Twelve Mile Wash near the Green River in Uintah County, Utah.

The existing facility has been permitted through the Division of Oil, Gas and Mining (DOGM) to accept and treat water from E&P activities. Since the regulation of drilling mud disposal is regulated through the Division of Solid Waste (DOSW) a separate permit is required in order for the facility to accept dewatered drilling mud.

Both the DOGM and DOSW have strict regulations regarding these types of facilities in order to prevent contamination of ground water and the surrounding environment. The proposed facility meets or exceeds all of the two department's requirements.

If you have any questions or concerns regarding this matter, please feel free to contact me at the number listed above.

Sincerely,
Caldwell Richards Sorensen

Clinton J. Allen, PE
Project Manager

cc file: 14120V Brennan Bottoms Disposal

CALDWELL
RICHARDS
SORENSEN
Answers to Infrastructure®

2028 West 500 North
P.O. Box 1485
Vernal, UT 84078

Phone: 435.781.2550
Fax: 435.781.2950

crsengineers.com

November 12, 2014

Mike McKee
Chairman, Uintah County Commission
52 East 100 North
Vernal, Utah 84078

Re: Brennan Bottoms Disposal – Exploration and Production Waste Landfill Application

Dear Commissioner McKee,

Brennan Bottoms Disposal, in accordance with section R315-310-3(2)ii of the Utah administrative code, is providing this letter as notice that it intends to submit an application to the Utah Division of Solid Waste for a permit to convert one of their existing liquid disposal ponds into an approved Exploration and Production (E&P) Waste Landfill. You are receiving this notice because Uintah County has been identified as owning property adjacent to the proposed site.

The purpose of the E&P Waste Landfill application is to allow the facility to accept dewatered drilling mud from energy exploration and production activities and deposit it in a lined pond. The proposed facility is located at 3999 W 12250 S Twelve Mile Wash Rd which is in Twelve Mile Wash near the Green River in Uintah County, Utah.

The existing facility has been permitted through the Division of Oil, Gas and Mining (DOGM) to accept and treat water from E&P activities. Since the regulation of drilling mud disposal is regulated through the Division of Solid Waste (DOSW) a separate permit is required in order for the facility to accept dewatered drilling mud.

Both the DOGM and DOSW have strict regulations regarding these types of facilities in order to prevent contamination of ground water and the surrounding environment. The proposed facility meets or exceeds all of the two department's requirements.

If you have any questions or concerns regarding this matter, please feel free to contact me at the number listed above.

Sincerely,
Caldwell Richards Sorensen

Clinton J. Allen, PE
Project Manager

cc file: 14120V Brennan Bottoms Disposal

Appendix c

Applied Geotechnical Engineering Consultants, Inc.

March 14, 2011

Engineering Services, Inc.
2028 West 500 North, P.O. Box 1485
Vernal, UT 84078

Attention: Jeremey LeBeau
Email: jeremey@esivernal.com

Subject: Laboratory Results
Brennan Bottoms Land Farm Expansion
AGEC Project Number: 1110026

Gentlemen:

Applied Geotechnical Engineering Consultants, Inc. (AGEC) was requested to perform moisture/density, percent fines, Atterberg Limits, and permeability testing on two samples received in our laboratory on January 31, 2011.

Laboratory testing was performed in general accordance with the test methods shown Table 1.

Test results are presented on Table 2. Laboratory data collections sheets are included in the appendix.

If we can be of further service, please do not hesitate to call.

Sincerely,

APPLIED GEOTECHNICAL ENGINEERING CONSULTANTS, INC.

Stein Ingebrigtsen
Laboratory Manager

Reviewed by DJN, P.E.

Enclosures

Table 1

Test Methods

ASTM	Description
D 2216	Standard Test Methods for Laboratory Determination of Water (Moisture) Content of Soil and Rock by Mass
D 2937	Standard Test Method for Density of Soil in Place by the Drive-Cylinder Method
D 1140	Standard Test Methods for Amount of Material in Soils Finer than No. 200 (75-μm)
D 4318	Standard Test Methods for Liquid Limit, Plastic Limit and Plasticity Index of Soils
D 2434	Standard Test Method for Permeability of Granular Soils (Constant Head)

APPLIED GEOTECHNICAL ENGINEERING CONSULTANTS, INC

Brennan Bottoms Land Farm Expansion

SUMMARY OF LABORATORY TEST RESULTS - TABLE 2

Project Number 1110026

Sample Number	Moisture Content (%)	Unit Weight pcf	Passing No. 200 Sieve (%)	Atterberg Limit LL	Atterberg Limit PI	Permeability cm/s
1A @ 14'	5	109	64	26	12	2.2×10^{-7}
6A @ 14'	7	97	73	27	11	3.5×10^{-6}

LL = Liquid Limit

PI = Plasticity index

BORING LOCATIONS	**BRENNAN BOTTOMS DISPOSAL FACILITY** LANDFARM EXPANSION UINTAH COUNTY, UTAH	ENGINEERING SERVICES, INC. P.O. BOX 1485 VERNAL, UTAH 84078 (435) 781-2550	ORIGINAL BY____ DATE____ REVISIONS 1 BY____ DATE____ 2 BY____ DATE____ 3 BY____ DATE____	SHEET 1 OF 1

Appendix

Data Collection Sheets

Applied Geotechnical Engineering Consultants, Inc.

PROJECT NUMBER 1110026
PROJECT NAME Vernal Drilling

MOISTURE/DENSITY WORKSHEET

Sheet prepared by DJN Date 1/31
Sheet calculated by SR Sheet 1 of 1

IDENTIFICATION		TEST RESULTS			DENSITY DETERMINATION					MOISTURE DETERMINATION				
Boring	Depth, Feet	% Moisture	Dry Density (pcf)	SAMPLE DESCRIPTION	Sample Length	Sample Diameter	Set Soil & Tare Wt.	Tare Weight	Wet Soil Weight	Dish Name	Wet Soil & Dish Wt.	Dry Soil & Dish Wt.	Dish Weight	Run By
1A	14'	5.1	138.6	Sandy Lean Clay	4.0	1.93	460.49	110.57		SHA	341.84	335.35	218.51	
6A	14'	6.8	96.6	Lean Clay with Sand	3.7	1.93	401.72	118.96		RTU	306.06	300.30	215.40	

Applied Geotechnical Engineering Consultants, Inc.

PROJECT NUMBER 1116026 — GRADATION ANALYSIS WORKSHEET — Sheet prepared by _____ Date _____

PROJECT NAME [redacted] — Sheet calculated by _____ Sheet ___ of ___

Boring @ Depth	1A @	6A @	@	@	@	@
Run By						
Test Type	-200 / Gradation	-200 / Gradation	-200 / Gradation	-200 / Gradation	-200 / Gradation	-200 / Gradation
Dish Name	I6F	602				
Dry Soil & Dish	339.91	330.86				
Dish Weight	214.23	216.99				
Dry Soil Wt.	125.68	113.87				

Sieve Size	Cum. Wt.	% Pass.	Cum. Wt.	% Pass.	Cum. Wt.	% Pass.	Cum. Wt.	% Pass.	Cum. Wt.	% Pass.	Cum. Wt.	% Pass.
	259.66		248.18									
5"												
3"												
1½"												
¾"												
⅜"												
No. 4												
No. 8												
No. 16												
No. 30												
No. 50												
No. 100												
No. 200	45.43	64	31.19	73								
Pan												

Gravel	%	%	%	%	%
Sand	%	%	%	%	%
Silt & Clay	64 %	73 %	%	%	%

Applied Geotechnical Engineering Consultants, Inc.

Project Number [illegible]

Project Name [illegible]

Atterberg Limits Worksheet

Sheet Prepared by _____ Date _____

Sheet Caluculated by [illegible] Sheet _____ of _____

Boring @ Depth	[illegible] @ 14'				[illegible] @ [illegible]				@			
Sample No./Run by	/				/				/			
Test Type	Plastic Limit #1	Plastic Limit #2	Liquid Limit #1	Liquid Limit #2	Plastic Limit #1	Plastic Limit #2	Liquid Limit #1	Liquid Limit #2	Plastic Limit #1	Plastic Limit #2	Liquid Limit #1	Liquid Limit #2
No. of Blows			27	28	[illegible]	[illegible]	23	24	[illegible]	[illegible]		
Dish Name	VOX	GAC	LSE	TTT	PIS	SHT	NS	P				
Wt. of Wet Soil & Dish	[illegible]	22.23	24.79	26.58	22.56	22.78	25.83	26.94				
Wt. of Dry Soil & Dish	20.22	21.27	22.55	24.00	21.43	21.58	23.81	24.75				
Wt. of Dish	[illegible]	[illegible]	[illegible]	[illegible]	14.12	13.92	[illegible]	16.50				
Water Content	14.1	14.0	26.4	26.5	15.5	15.7	26.9	26.4				
Average Water Content	14		26		16		27					
Liquid Limit	26				27							
Plasiticity Index	CL 12				CL 11							

Boring @ Depth	@				@				@			
Sample No./Run by	/				/				/			
Test Type	Plastic Limit #1	Plastic Limit #2	Liquid Limit #1	Liquid Limit #2	Plastic Limit #1	Plastic Limit #2	Liquid Limit #1	Liquid Limit #2	Plastic Limit #1	Plastic Limit #2	Liquid Limit #1	Liquid Limit #2
No. of Blows					[illegible]	[illegible]			[illegible]	[illegible]		
Dish Name												
Wt. of Wet Soil & Dish												
Wt. of Dry Soil & Dish												
Wt. of Dish												
Water Content												
Average Water Content												
Liquid Limit												
Plasiticity Index												

APPLIED GEOTECHNICAL ENGINEERING CONSULTANTS, INC.

Constant Head Permeability Test

Project Number 1110026
Project Name Vernal Drilling
Sample # B-1A @ 14'

Date 1/31/2011
Run by DJN
Calc. by

Sample length, *l* 2.8" 7.11 cm
Sample diameter 1.93" 4.9cm
Sample area, *a* 18.87cm²

Weight of sample & liner 350.62g
Weight of liner
Wet weight of sample

Sample Description: Sandy Lean Clay

Burette Area = 4.7cm²

Time of reading	Time, *t* (sec)	Temp (°C)	R_T (from ASTM D5084 Table 1)	Total head, *h* (cm)	Water level Start	Water level Finish	Flow volume, *Q* (cm^3)	$k = Ql/aht$ (cm/sec)
11:50 am	~~15,0~~	20	1	10.6' 323cm	153.5			
4:00 pm	15,000	|	|	323	153.5	152.8	3.29	2.6×10^{-7}
8:30 am	59,400	|	|	323		150.5	10.81	2.1×10^{-7}
4:45pm	29,700	|	|	323		149.3	5.64	2.2×10^{-7}
11:30pm	74,700	|	|	323		146.5	13.16	2.1×10^{-7}

2.2×10^{-7}

Equation: $k = \frac{Ql}{aht}$

Notes/Description of setup:

APPLIED GEOTECHNICAL ENGINEERING CONSULTANTS, INC.

Constant Head Permeability Test

Project Number 1110026 Date 1/31/2011

Project Name Vernal Drilling Run by DJN

Sample # B-6A @ 14' Calc. by

Sample length, *l* 2.8 in 7.11 cm Weight of sample & liner 325.50

Sample diameter 1.93" Weight of liner

Sample area, *a* 18.87 cm² Wet weight of sample

Sample Description:
Lean Clay with Sand

Burette Area is 4.7 cm²

Time of reading	Time, *t* (sec)	Temp (°C)	R_T (from ASTM D5084 Table 1)	Total head, *h* (cm)	Water level		Flow volume, *Q* (cm^3)	*k* = *Ql*/*aht* (cm/sec)
					Start	Finish		
		20	1	66.5	~~84.4~~			
1:20-4:50	12,600	"	"	"	83.0	81.4	7.52	3.4×10^{-6}
4:50PM	56,700	"	"	"	81.4	73.9	35.25	3.5×10^{-6}
8:35AM	29,400	"	"	"	73.9	70.1	17.86	3.4×10^{-6}
4:45 PM	60,900	"	"	"	70.1	61.9	38.54	3.6×10^{-6}
9:40 AM		"	"	"	61.9			
2:53PM	18,780	"	"	"		59.2	12.69	3.8×10^{-6}
		"						

3.5×10^{-6}

Equation: $k = \frac{Ql}{aht}$

Notes/Description of setup:

-Left Burette

LOG OF BORING P1A PROJECT NAME BBD Land Farm Borings PAGE 1 OF 1

PROJECT NO. _____ DRILLING METHOD 8" HSA ENGINEER JAL

BORING ELEVATION ~4741' RIG / DRILLER CME / MAT

DATE & TIME 1/26/2021

BORING LOCATION _____

WATER LEVEL	Wet @ bottom of		
DATE	Borings ~ 43'		
TIME			

DEPTH FROM	DEPTH TO	SOIL SYMBOL	SOIL DESCRIPTION AND DRILLING CONDITIONS
0	19'	CL	Lean Clay, stiff to v. stiff, brown, dry
19'	20'	CL	Weathered Claystone, w/ sand, gray, dry

DEPTH TO TOP (FEET)	BLOW COUNT	SAMPLE TYPE	SOIL SYM.	MOISTURE: DRY	MOIST	WET	FIRMNESS: SOFT/LOOSE	STIFF	HARD/DENSE	PEN. (TSF)	% FINES	GRADING: FINE	MEDIUM	COARSE	GRAVEL	COLOR	PLASTIC: LOW	MEDIUM	HIGH	CONDITION: CEMENTED	IRON OXIDE	SULFATES	CALCAREOUS	POROUS	ROOTS	OTHER	RECOVERY
2'	2-6-7-8	SPT	CL	X							90	S				b										✓
4'	6-10-9-13	CAL	CL	X							80	S				b										✓
9'	9-13-12-19	CAL	CL	X							90	S				b										✓
14'	8-16-24	CAL	CL	X							90	S				b										✓
19'	10-40/3"	BAG	CL	X							95					g				X					Weathered Claystone	✓

BACKFILL METHOD Cuttings

DEPTH TO CAVE _____

PVC CASING (DEPTH/DIA.) _____

BOTTOM HOLE DEPTH ~20'

LOG OF BORING 32A PROJECT NAME [redacted] Land Form Services PAGE 1 OF 1

PROJECT NO. _____ DRILLING METHOD 8" HSA ENGINEER JAL

BORING ELEVATION ~4738' RIG / DRILLER CME 75 / [redacted]

DATE & TIME 1/26/[redacted]

BORING LOCATION _____

WATER LEVEL			
DATE			
TIME	✓		

DEPTH FROM	DEPTH TO	SOIL SYMBOL	SOIL DESCRIPTION AND DRILLING CONDITIONS
0	9'	ML	Silt w/ sand, stiff, dry, brown
9'	14'	CL	Lean clay w/ silt & sand, stiff, dry, brown
14'	29'	SM	Silty sand, m. loose to dense, dry, brown
29'	34'	ML	Silt w/ sand, stiff to v. stiff, dry, brown
34'	42½'	SC+SM	Clayey & silty sand, m. dense to dense, dry brown
42½'	→	Bedrock	Likely claystone (no recovery), wet interface
		42½'	Bed Rock

DEPTH TO TOP (FEET)	BLOW COUNT	SAMPLE TYPE	SOIL SYM.	MOISTURE: DRY	MOISTURE: MOIST	MOISTURE: WET	FIRMNESS: SOFT/LOOSE	FIRMNESS: STIFF	FIRMNESS: HARD/DENSE	PEN. (TSF)	% FINES	GRADING: FINE	GRADING: MEDIUM	GRADING: COARSE	GRADING: GRAVEL	COLOR	PLASTIC: LOW	PLASTIC: MEDIUM	PLASTIC: HIGH	CONDITION: CEMENTED	CONDITION: IRON OXIDE	CONDITION: SULFATES	CONDITION: CALCAREOUS	CONDITION: POROUS	CONDITION: ROOTS	OTHER	RECOVERY
2	3-4-6	CAL	ML	X							85	S				6										CLAYEY	
4	4-7-11	CAL	ML	X							95	S				6										CLAYEY	
9	4-7-11	CAL	CL	X							85	S				6											
14	4-7-11	CAL	SM	X							45	X	S			6											
19	11-15-22	CAL	SM	X							20	X	Y			6											
24	8-12-17	CAL	SM	X							40	X	S			6											
29	8-17-20	CAL	ML	X							80	X				6										CLAYEY	
34	6-12-22	CAL	SC	X							30	X	X			6					S		S				
36½	7-11-16	CAL	SC	X							30	X	C	F	S	6					S		S				
39'	5-11-11	CAL	SM	X							40	O	S			5											
44'	50-50/2"	CAL	— ?			X																					

BACKFILL METHOD CUTTINGS

DEPTH TO CAVE —

PVC CASING (DEPTH/DIA.) 45'

BOTTOM HOLE DEPTH 45'

LOG OF BORING P4A PROJECT NAME BRD (and) FROM BORINGS PAGE 1 OF 1

PROJECT NO. _____ DRILLING METHOD _____ ENGINEER JAL

BORING ELEVATION ~4735' RIG / DRILLER CME / MAT

DATE & TIME 1/26/2011

BORING LOCATION _____

WATER LEVEL			
DATE			
TIME			

DEPTH FROM	DEPTH TO	SOIL SYMBOL	SOIL DESCRIPTION AND DRILLING CONDITIONS
0	31'	CL/SM	SANDY SILT INTERBEDDED W/ SILTY SAND, stiff to v. stiff, dry, brown
31'	~40'	SILTSTONE	Bedrock, m. hard to hard, brown to gray
19	23½	ML	
			* Bedrock @ ~ 31'

DEPTH TO TOP (FEET)	BLOW COUNT	SAMPLE TYPE	SOIL SYM.	MOISTURE: DRY	MOIST	WET	FIRMNESS: SOFT/LOOSE	STIFF	HARD/DENSE	PEN. (TSF)	% FINES	GRADING: FINE	MEDIUM	COARSE	GRAVEL	COLOR	PLASTIC: LOW	MEDIUM	HIGH	CONDITION: CEMENTED	IRON OXIDE	SULFATES	CALCAREOUS	POROUS	ROOTS	OTHER	RECOVERY
2	3.5.7	CAL	ML	X							75	S				6										✓
4	8.5.9	CAL	SM	X							40					6										✓
9	4.5.8	CAL	ML	X							60					6										✓
14	5.16.22	CAL	SM	X							20	X	X			6				VS	S					✓
19	7.11.16	CAL	ML	X							90	S				6									GRAVEL	✓
24	5.12.26	CAL	SM	X							20	X	X			6				VS	X					✓
29	8.17.26	CAL	ML	X							51					6										✓
34	50/5"	CAL	BR	X							90	S				7					X				SILTSTONE	✓
39	50/1"	CAL	BR																							—
		SPT																							NONE	

BACKFILL METHOD Cuttings

DEPTH TO CAVE _____

PVC CASING (DEPTH/DIA.) /

BOTTOM HOLE DEPTH 39'

LOG OF BORING T36A PROJECT NAME 3BD Land Transformers PAGE 1 OF 1

PROJECT NO. _____ DRILLING METHOD 8" HSA ENGINEER JAL

BORING ELEVATION N 4735' RIG / DRILLER CME / MA

DATE & TIME 1/26/2011

BORING LOCATION _____

WATER LEVEL			
DATE			
TIME			

DEPTH FROM	DEPTH TO	SOIL SYMBOL	SOIL DESCRIPTION AND DRILLING CONDITIONS
0	10½	ML	Sand, silt, stiff, dry, brown
10½	25½	CL	Lean clay w/ sand, stiff, dry, brown
10	10½	clay transition	

DEPTH TO TOP (FEET)	BLOW COUNT	SAMPLE TYPE	SOIL SYM.	MOISTURE: DRY	MOISTURE: MOIST	MOISTURE: WET	FIRMNESS: SOFT/LOOSE	FIRMNESS: STIFF	FIRMNESS: HARD/DENSE	PEN. (TSF)	% FINES	GRADING: FINE	GRADING: MEDIUM	GRADING: COARSE	GRADING: GRAVEL	COLOR	PLASTIC: LOW	PLASTIC: MEDIUM	PLASTIC: HIGH	CONDITION: CEMENTED	CONDITION: IRON OXIDE	CONDITION: SULFATES	CONDITION: CALCAREOUS	CONDITION: POROUS	CONDITION: ROOTS	OTHER	RECOVERY
2	2.6.9	CAL	ML	X							80	X				b											✓
4	5.8.8	CAL	ML	X							70					S										CLAYEY	✓
9	5.12.29	CAL	CL/SM	X							75/25					b											✓
14	4.6.8	CAL	CL	X							90	S				b											✓
19	2.5.6	CAL	CL	X							85	S				b											✓
24	4.7.9	CAL	CL	X							60	X	S			b							X				✓

BACKFILL METHOD Cuttings

DEPTH TO CAVE _____

PVC CASING (DEPTH/DIA.) _____

BOTTOM HOLE DEPTH 25½'

LOG OF BORING B-1 PROJECT NAME BRENNAN BOTTOMS LANDFARM EXPANSION PAGE 1 OF 1

PROJECT NO. _____ DRILLING METHOD 18" AUGER ENGINEER JAL

BORING ELEVATION ~ 4940.20 RIG / DRILLER SOILMEC SR-30 / JASON

DATE & TIME 10/25/10a ~ 8:00 am

BORING LOCATION SEE MAP

WATER LEVEL			
DATE			
TIME			

DEPTH FROM	DEPTH TO	SOIL SYMBOL	SOIL DESCRIPTION AND DRILLING CONDITIONS
0	20	CL	Lean clay w/ silt & sand interbedded w/ silt & sandy silt & sand, m. stiff, dry brown
20	25	ML	Silt w/ varying amounts of sand, m. stiff, dry, lt. brown
25	30	CL	Lean clay, stiff, dry, brown
30	53	Rock	Claystone interbedded w/ siltstone & sandstone, m hard, dry, brown & lt brown

DEPTH TO TOP (FEET)	BLOW COUNT	SAMPLE TYPE	SOIL SYM.	MOISTURE: DRY	MOIST	WET	FIRMNESS: SOFT/LOOSE	STIFF	HARD/DENSE	PEN. (TSF)	% FINES	GRADING: FINE	MEDIUM	COARSE	GRAVEL	COLOR	PLASTIC: LOW	MEDIUM	HIGH	CONDITION: CEMENTED	IRON OXIDE	SULFATES	CALCAREOUS	POROUS	ROOTS	OTHER	RECOVERY
12			CL	X				m			90					b											
20			ML	X				m			85	S				lb											
25			CL	X				X			90					b											
30			Rock	X					sl		90					b										Clay	
40			Rock	X					m		95	S				lb										Silt	
45			Rock	X					m		90					b										Clay	
50		Bag	Rock	X					m-h		95	S				b										Silt	

BACKFILL METHOD Native

DEPTH TO CAVE —

PVC CASING (DEPTH/DIA.) —

BOTTOM HOLE DEPTH 53'

LOG OF BORING B-2 PROJECT NAME BRENNAN BOTTOMS LANDFARM EXPANSION PAGE 1 OF 1

PROJECT NO. _____ DRILLING METHOD 18" AUGER ENGINEER JAL

BORING ELEVATION ~ 4738.40 RIG / DRILLER SOILMEC SR-30 / JASON

DATE & TIME 10/25/10 ~ 9:30 AM

BORING LOCATION SEE MAP

WATER LEVEL			
DATE			
TIME			

DEPTH FROM	DEPTH TO	SOIL SYMBOL	SOIL DESCRIPTION AND DRILLING CONDITIONS
0	20	ML	Silt w/ varying amounts of sand, m. stiff, dry, lt. brown
20	33	ROCK	SILTSTONE, m. hard, dry, lt. brown
33	47	ROCK	CLAYSTONE, m hard, dry, brown
47	50	ROCK	SILTSTONE "
50	53	ROCK	CLAYSTONE "

DEPTH TO TOP (FEET)	BLOW COUNT	SAMPLE TYPE	SOIL SYM.	MOISTURE: DRY	MOIST	WET	FIRMNESS: SOFT/LOOSE	STIFF	HARD/DENSE	PEN. (TSF)	% FINES	GRADING: FINE	MEDIUM	COARSE	GRAVEL	COLOR	PLASTIC: LOW	MEDIUM	HIGH	CONDITION: CEMENTED	IRON OXIDE	SULFATES	CALCAREOUS	POROUS	ROOTS	OTHER	RECOVERY
10			ML	X				M			60	F	F			lb										SILT	
20			ROCK	X					M		60	X	X			lb										SILT	
33			ROCK	X					M		90					b					S					CLAY	
38			ROCK	X					M		90					b					S					CLAY	
42			ROCK	X					M		90					b										CLAY	
47			ROCK	X					M		60	F	F			lb										SILT	
50		JAL	ROCK	X					M		90	S				b										CLAY	✓

BACKFILL METHOD none

DEPTH TO CAVE —

PVC CASING (DEPTH/DIA.) _____

BOTTOM HOLE DEPTH 53'

LOG OF BORING B-3 PROJECT NAME BRENNAN BOTTOMS LANDFARM EXPANSION PAGE 1 OF 2

PROJECT NO. _____ DRILLING METHOD 18" AUGER ENGINEER JAL

BORING ELEVATION 4740.00 RIG / DRILLER SOILMEC SR-30 / JASON

DATE & TIME 10/12/10 ~ 3:00 PM

BORING LOCATION SEE MAP

WATER LEVEL	~45'	57'	
DATE			
TIME			

DEPTH FROM	DEPTH TO	SOIL SYMBOL	SOIL DESCRIPTION AND DRILLING CONDITIONS
0	15	SM	Silty sand, m. dense, dry, brown
15	25	ML	Silt w/ varying amounts of sand, stiff, dry lt brown & grey
25	30	CL	LEAN clay, stiff, dry, grey
30	35	ML	Silt w/ varying amounts of sand, stiff, dry, brown
35	57	SM	Silty Sand, m. dense, dry to wet, brown & grey
57	61	CL	CLAY, possibly (ROCK), stiff, moist, brown

DEPTH TO TOP (FEET)	BLOW COUNT	SAMPLE TYPE	SOIL SYM.	MOISTURE: DRY	MOIST	WET	FIRMNESS: SOFT/LOOSE	STIFF	HARD/DENSE	PEN. (TSF)	% FINES	GRADING: FINE	MEDIUM	COARSE	GRAVEL	COLOR	PLASTIC: LOW	MEDIUM	HIGH	CONDITION: CEMENTED	IRON OXIDE	SULFATES	CALCAREOUS	POROUS	ROOTS	OTHER	RECOVERY
5		BAG	SM	X					M		20	X				5										✓
10		BAG	SM	X					M		40	X				5										✓
15		BAG	ML	X				X			70	X				6										✓
20		BAG	ML	X				X			65	X				9										✓
25		BAG	CL	X				V			90	X				9										✓
30		BAG	ML	X				V			80	X				5										✓
35		BAG	SM	X					M		40	X	X			5										✓
40		BAG	SM	X					M		20	X	X			5										✓
45		BAG	SM		V				M		20	X	X			5				S						✓
50		BAG	SM		V				M		20	X	X			9										✓
55		BAG	SM			X			X		20	X	X			9										✓

BACKFILL METHOD none

DEPTH TO CAVE —

PVC CASING (DEPTH/DIA.) —

BOTTOM HOLE DEPTH 61'

LOG OF BORING B-3 PROJECT NAME BRENNAN BOTTOMS LANDFARM EXPANSION PAGE 2 OF 2

PROJECT NO. _____ DRILLING METHOD 18" AUGER ENGINEER JAL

BORING ELEVATION 4740.00 RIG / DRILLER SOILMEC SR-30 / JASON

DATE & TIME 10/22/10 ~ 3:00 pm

BORING LOCATION SEE MAP

WATER LEVEL			
DATE			
TIME			

DEPTH FROM	DEPTH TO	SOIL SYMBOL	SOIL DESCRIPTION AND DRILLING CONDITIONS

DEPTH TO TOP (FEET)	BLOW COUNT	SAMPLE TYPE	SOIL SYM.	MOISTURE: DRY	MOISTURE: MOIST	MOISTURE: WET	FIRMNESS: SOFT/LOOSE	FIRMNESS: STIFF	FIRMNESS: HARD/DENSE	PEN. (TSF)	% FINES	GRADING: FINE	GRADING: MEDIUM	GRADING: COARSE	GRADING: GRAVEL	COLOR	PLASTIC: LOW	PLASTIC: MEDIUM	PLASTIC: HIGH	CONDITION: CEMENTED	CONDITION: IRON OXIDE	CONDITION: SULFATES	CONDITION: CALCAREOUS	CONDITION: POROUS	CONDITION: ROOTS	OTHER	RECOVERY
57		BAG	CL			X		X			90	5				3											✓
60		BAG	CL		X			X			90					9											✓

BACKFILL METHOD none

DEPTH TO CAVE —

PVC CASING (DEPTH/DIA.) —

BOTTOM HOLE DEPTH 61'

LOG OF BORING B-4 PROJECT NAME BRENNAN BOTTOMS LANDFARM EXPANSION PAGE 1 OF 1

PROJECT NO. _____ DRILLING METHOD 18" AUGER ENGINEER JAL

BORING ELEVATION 4736.00 RIG / DRILLER SOILMEC SR-30 / JASON

DATE & TIME 10/27/10 ~ 1:00 pm

BORING LOCATION SEE MAP

WATER LEVEL			
DATE			
TIME			

DEPTH FROM	DEPTH TO	SOIL SYMBOL	SOIL DESCRIPTION AND DRILLING CONDITIONS
0	34	ML	silt w/ varying amounts of sand, m. stiff, dry.
34	40	SM	silty sand, m dense, dry, brown
40	54	ROCK	claystone, m. hard, dry, green

DEPTH TO TOP (FEET)	BLOW COUNT	SAMPLE TYPE	SOIL SYM.	MOISTURE: DRY	MOIST	WET	FIRMNESS: SOFT/LOOSE	STIFF	HARD/DENSE	PEN. (TSF)	% FINES	GRADING: FINE	MEDIUM	COARSE	GRAVEL	COLOR	PLASTIC: LOW	MEDIUM	HIGH	CONDITION: CEMENTED	IRON OXIDE	SULFATES	CALCAREOUS	POROUS	ROOTS	OTHER	RECOVERY
5			ML	X				m			65	X				b										
20			ML	X				m			80	X				b										
34			SM	X					m		40	X				b										
40			ROCK	X					m		90					g									CLAY	
50		SHELBY	ROCK	X					m		90					g									CLAY	✓

BACKFILL METHOD none

DEPTH TO CAVE —

PVC CASING (DEPTH/DIA.) —

BOTTOM HOLE DEPTH 54'

LOG OF BORING B-5 PROJECT NAME BRENNAN BOTTOMS LANDFARM EXPANSION PAGE 1 OF 1

PROJECT NO. _____ DRILLING METHOD 18" AUGER ENGINEER JAL

BORING ELEVATION ~ 4725.30 RIG / DRILLER SOILMEC SR-30 / JASON

DATE & TIME 10/22/10 ~ 10:30 AM

BORING LOCATION SEE MAP

WATER LEVEL			
DATE			
TIME			

DEPTH FROM	DEPTH TO	SOIL SYMBOL	SOIL DESCRIPTION AND DRILLING CONDITIONS
0	23	ML	Silt w/ varying amounts of sand, m. stiff, lean, brown
23	50	SM	Silty sand (possibly bedrock) m. dense, dry, brown ~40'
50	EOH	BEDROCK ML	SILTSTONE, m hard, dry, gray

DEPTH TO TOP (FEET)	BLOW COUNT	SAMPLE TYPE	SOIL SYM.	MOISTURE: DRY	MOIST	WET	FIRMNESS: SOFT/LOOSE	STIFF	HARD/DENSE	PEN. (TSF)	% FINES	GRADING: FINE	MEDIUM	COARSE	GRAVEL	COLOR	PLASTIC: LOW	MEDIUM	HIGH	CONDITION: CEMENTED	IRON OXIDE	SULFATES	CALCAREOUS	POROUS	ROOTS	OTHER	RECOVERY
7			ML	X				M			80	X				5										
14			ML	X				M			80	T				5										
23			SM	X					M		40	T	X	X		10										
31			SM	X					M		30	X	M	S		5										
40			SM	X					T		70	X	M	S		5										
50		BAG	ML	X					M		75	X	X			9										

BACKFILL METHOD NONE

DEPTH TO CAVE —

PVC CASING (DEPTH/DIA.) —

BOTTOM HOLE DEPTH 54'

LOG OF BORING B-6 PROJECT NAME BRENNAN BOTTOMS LANDFARM EXPANSION PAGE 1 OF 1

PROJECT NO. _____ DRILLING METHOD 18" AUGER ENGINEER JAL

BORING ELEVATION ~4775.30 RIG / DRILLER SOILMEC SR-30 / JASON

DATE & TIME 10/22/10 ~ 5:00 pm

BORING LOCATION SEE MAP

WATER LEVEL	47'-50'		
DATE			
TIME			

DEPTH FROM	DEPTH TO	SOIL SYMBOL	SOIL DESCRIPTION AND DRILLING CONDITIONS
0	48	SM	silty sand w/ layers of silt w/ varying amounts of sand, w. dense, dry to wet, brown
48	58	CL	lean clay, wet to s. moist, stiff brown, drying out w/ depth

DEPTH TO TOP (FEET)	BLOW COUNT	SAMPLE TYPE	SOIL SYM.	MOISTURE: DRY	MOIST	WET	FIRMNESS: SOFT/LOOSE	STIFF	HARD/DENSE	PEN. (TSF)	% FINES	GRADING: FINE	MEDIUM	COARSE	GRAVEL	COLOR	PLASTIC: LOW	MEDIUM	HIGH	CONDITION: CEMENTED	IRON OXIDE	SULFATES	CALCAREOUS	POROUS	ROOTS	OTHER	RECOVERY
5			SM	X					M		30	X	X			B										
10			SM	X					M		30	X	X			B										
17			SM	X					M		15	X	X			B										
47			SM		X	X			M		20	X	X			B										
50		DAG	CL		S			X			90	X				B										J

BACKFILL METHOD None

DEPTH TO CAVE —

PVC CASING (DEPTH/DIA.) —

BOTTOM HOLE DEPTH 58'

Appendix D

JON M. HUNTSMAN, JR.
Governor

GARY R. HERBERT
Lieutenant Governor

State of Utah

Department of Natural Resources

MICHAEL R. STYLER
Executive Director

Division of Oil, Gas & Mining

JOHN R. BAZA
Division Director

March 9, 2006

Don DeMille
Brennan Bottom Disposal
P.O. Box 1617
Roosevelt, Utah 84066

Re: Amended Approval to Construct Produced Water Evaporative Pit 4 & Amend Land Farm/Compost Area, Located in Section 19, Township 6 South, Range 21 East, Uintah County, Utah.

Dear Mr. DeMille,

Your application to construct produced water evaporative Pit 4 and amend the Land Farm/Compost area at the Brennan Bottom Disposal Facility ("the Facility") was approved on February 15, 2006, amended March 8, 2006. The application was reviewed by Division staff and meets the requirements for a produced water disposal pit & land farm/compost in accordance with Utah Administrative Code R649-9 et al., of the Oil and Gas General Rules.

Therefore approval to commence construction of Pit 4 at the Facility is hereby granted in accordance with the following stipulations:

1. The Division requires that our staff be informed of all phases of construction and be allowed the opportunity for inspection during the construction and installation activities including but not limited to, secondary liner installation, leak detection system emplacement, primary liner installation, and dike construction. Call Dan Jarvis at (801) 538-5338 or Lisha Cordova at (801) 538-5296 at least 2 days prior to construction activity.

2. A 40-mil HDPE secondary liner shall be placed in the bottom of Pit 4 below the leak detection system as specified on Sheet 3 of the engineering plans. The seams shall be tested prior to inspection.

3. Leak detection system emplacement shall be complete (including monitoring station), and shall be exposed (unburied) at time of inspection.

4. Primary liner installation shall be complete, seams shall be tested, and liner(s) shall be keyed into trench at time of inspection.

5. Upslope side and corners of the secondary containment berm that surrounds the entire facility including the Land Farm/Compost area shall be rip rapped to prevent erosion.

6. Additional bonding for Pit 4 in the amount of $61,350.00 is required prior to use.

7. The Pit shall be constructed under the supervision of a registered professional engineer.

Final approval to operate Pit 4 at the Facility will be issued upon completion of the construction phase, and compliance with all the stipulations.

In addition, construction of Pit 4 will amend the previously approved Land Farm/Compost area from 577' X 475' (6.4 acres) to 535' X 296' (3.64 acres). Solid and semi-solid waste material shall be land farmed/composted as set forth in the original application. Soils shall be remediated to 1% or less TPH and meet salinity guidelines in accordance with the Divisions' recommended cleanup levels.

This approval does not exempt the operator from complying with all other federal, state and local rules and ordinances.

If you have any questions concerning this approval, please contact Lisha Cordova at (801) 538-5296 or Brad Hill at (801) 538-5315.

Sincerely,

Gil Hunt
Associate Director, Oil & Gas

Attachments: 1
LC:mf
cc: Brad Hill, Permitting Manager
Dan Jarvis, Operations Manager
Richard Powell, Roosevelt Office
Mike George, DEQ/Div. of Water Quality
Robert Leake, Div. of Water Rights/Dam Safety
CIVCO Engineering, Troy Ostler, P.E.
Uintah County Planning Office
Facility File
Bond File

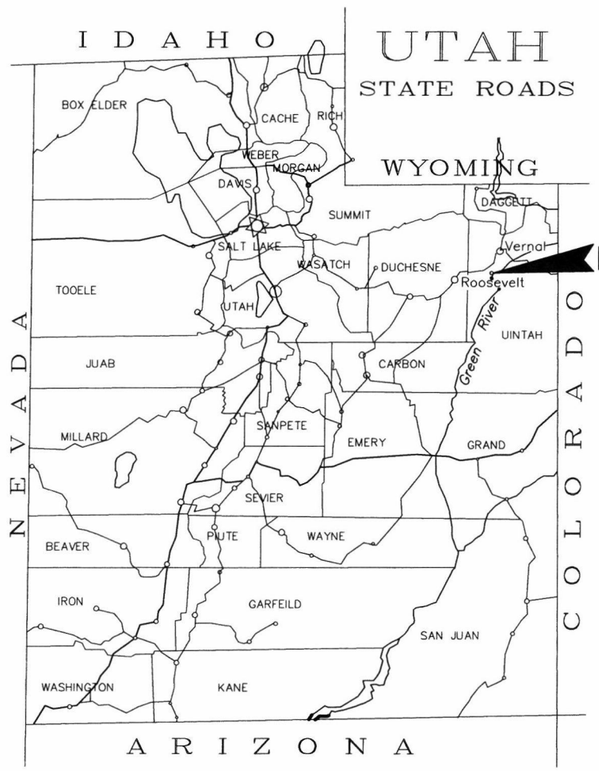

PROJECT LOCATION

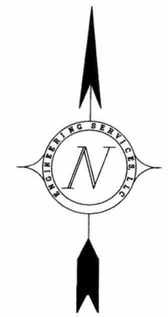

SCALE: 1" = 3000'

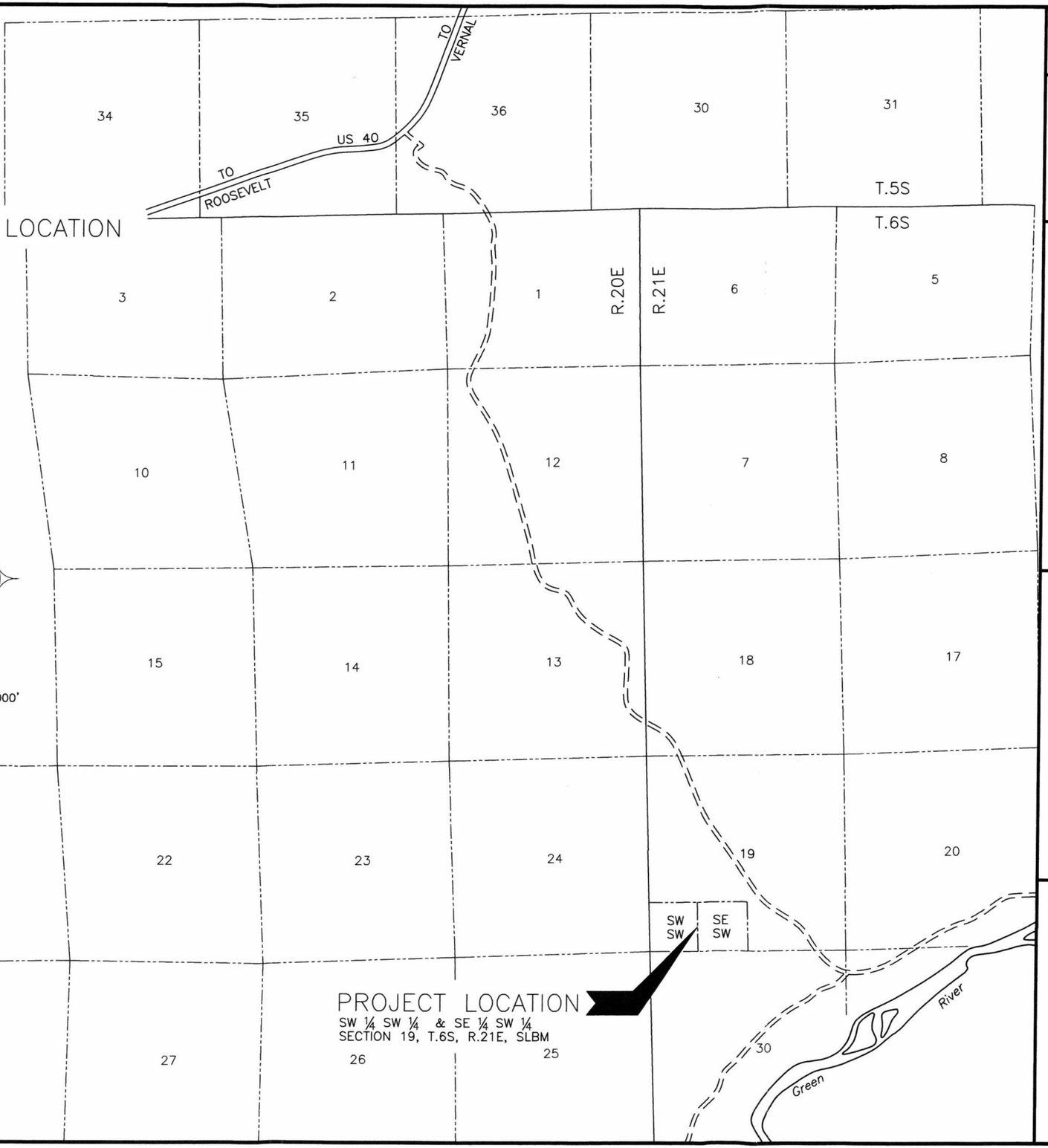

SHEET 1 OF 4

ORIGINAL
BY ____ DATE ____

REVISIONS
1 BY PAH DATE 3/11/03.
2 BY ____ DATE ____
3 BY ____ DATE ____

Engineering Services, Inc.
P.O. Box 1485
Vernal, Utah 84078
(435) 781-2550

BRENNAN BOTTOM DISPOSAL
PRODUCED WATER
EVAPORATIVE PIT #4
UINTAH COUNTY

AREA AND VICINITY MAP

PATH\FILE: Z:\Projects\MISCELLANEOUS\Don DeMille\Location Vicinity Map (Revised 3-11-03).dwg DATE: 9/18/2002

TANK SCHEDULE

1. RECEIVING TANK – 500 BBL
2. RECEIVING TANK – 500 BBL

DESIGN CRITERIA

POND 1
MAXIMUM WATER DEPTH – 8'
FREEBOARD – 2'
CAPACITY – 155,000 BBL (19.95 AF)

POND 2
MAXIMUM WATER DEPTH – 8'
FREEBOARD – 2'
CAPACITY – 155,000 BBL (19.95 AF)

POND 3
MAXIMUM WATER DEPTH – 8'
FREEBOARD – 2'
CAPACITY – 155,000 BBL (19.95 AF)

POND 4
MAXIMUM WATER DEPTH – 8'
FREEBOARD – 2'
CAPACITY – 155,000 BBL (19.95 AF)

ROUTE SURFACE WATER
ARROUND PONDS

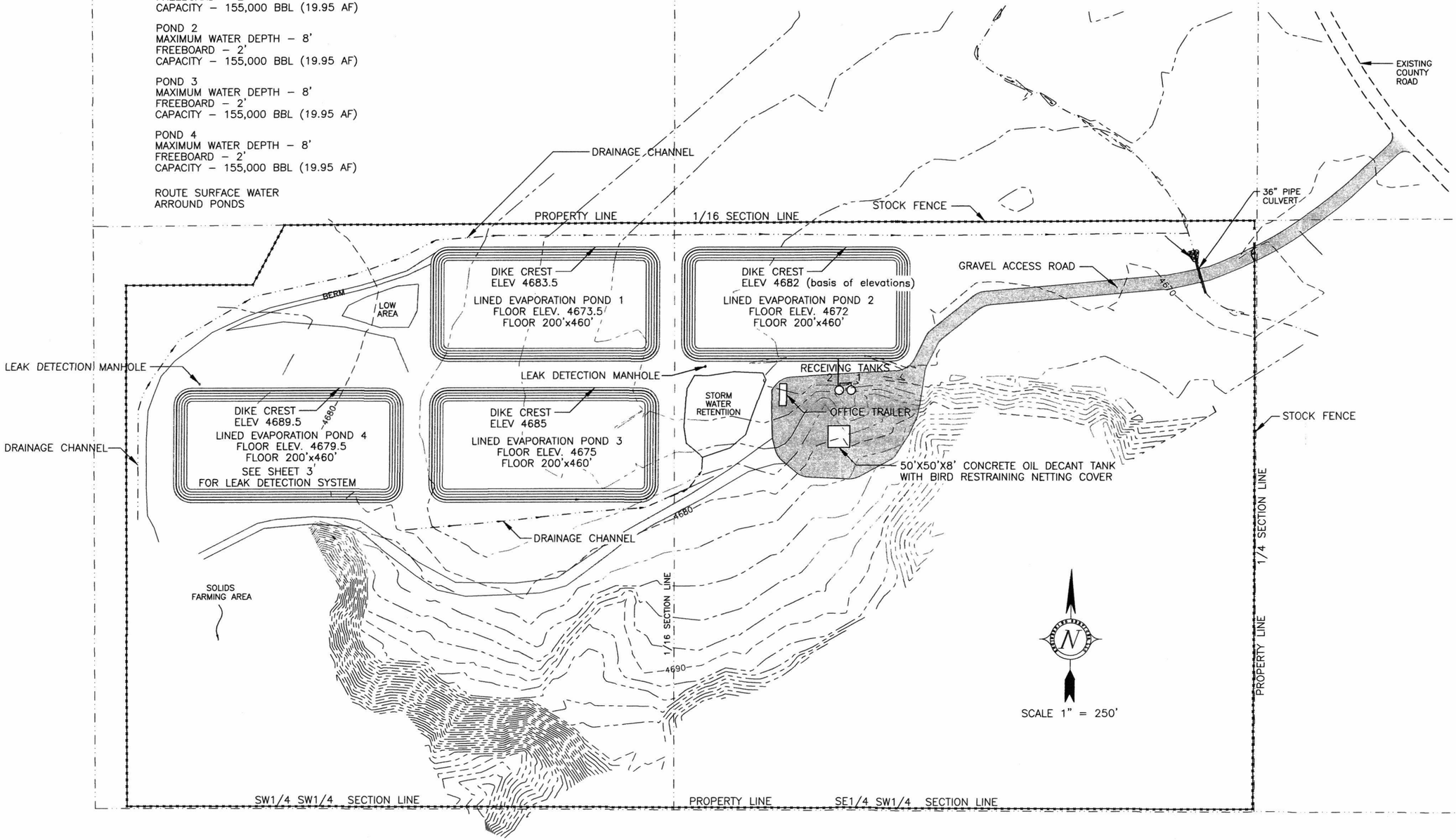

SHEET 2 OF 4

ORIGINAL
BY ____ DATE ____

REVISIONS
1 BY PAH DATE 3/11/03
2 BY ____ DATE ____
3 BY ____ DATE ____

Engineering Services, Inc.
P.O. Box 1485
Vernal, Utah 84078
(435) 781-2550

BRENNAN BOTTOM DISPOSAL
PRODUCED WATER
EVAPORATIVE PIT #4
UINTAH COUNTY

SITE PLAN

PATH\FILE: Z:\Projects\MISCELLANEOUS\Don DeMille\Section and Details (Revised 3-11-03).dwg DATE: 3/11/2003

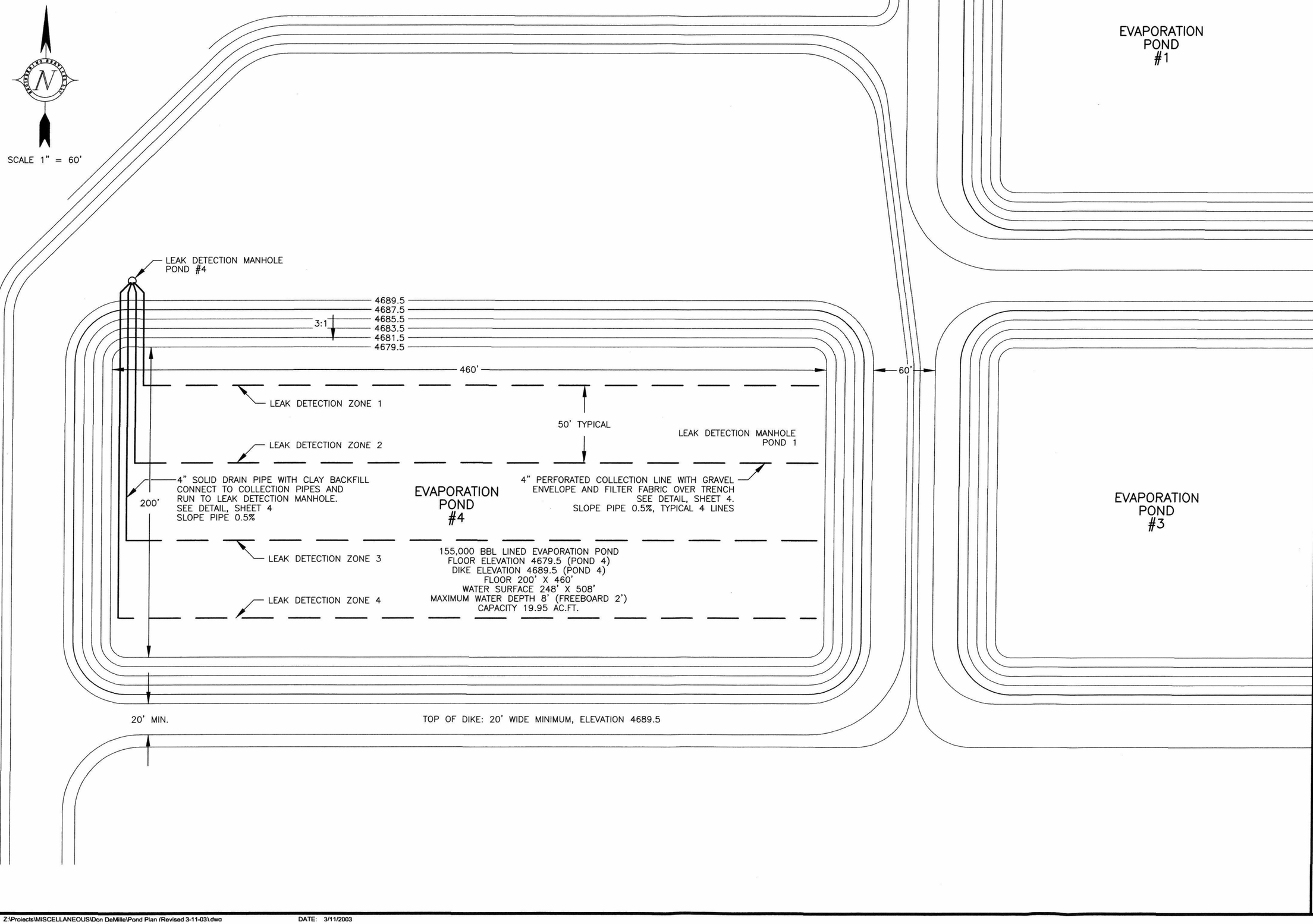

SHEET 3 OF 4

ORIGINAL
BY ____ DATE ____

REVISIONS
1 BY PAH DATE 3/11/03
2 BY ____ DATE ____
3 BY ____ DATE ____

Engineering Services, Inc.
P.O. Box 1485
Vernal, Utah 84078
(435) 781-2550

BRENNAN BOTTOM DISPOSAL
PRODUCED WATER
EVAPORATIVE PIT #4
UINTAH COUNTY

POND PLAN

PATH\FILE: Z:\Projects\MISCELLANEOUS\Don DeMille\Pond Plan (Revised 3-11-03).dwg DATE: 3/11/2003

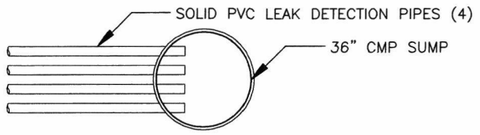

PLAN

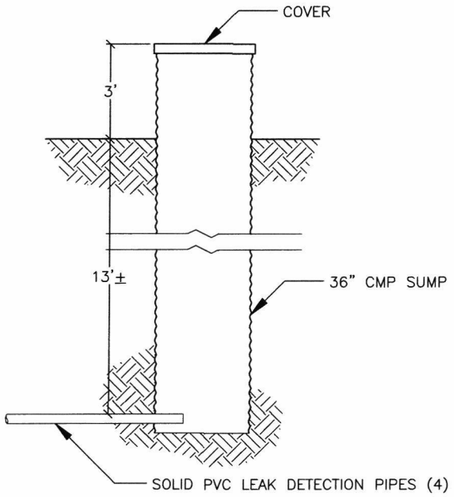

SECTION

LEAK DETECTION SUMP

NO SCALE

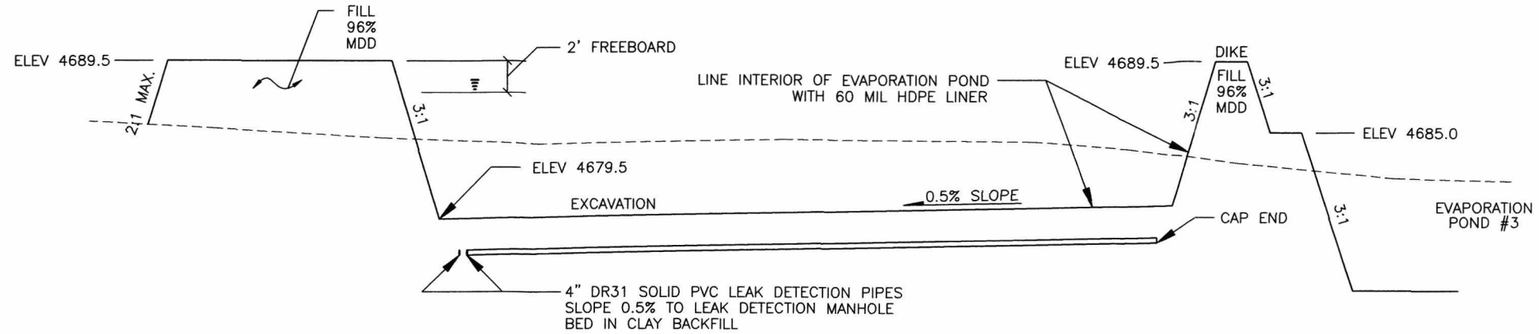

EVAPORATION POND #4 LONGITUDINAL SECTION

SCALE 1" = 100' HORIZONTAL
SCALE 1" = 10' VERTICAL

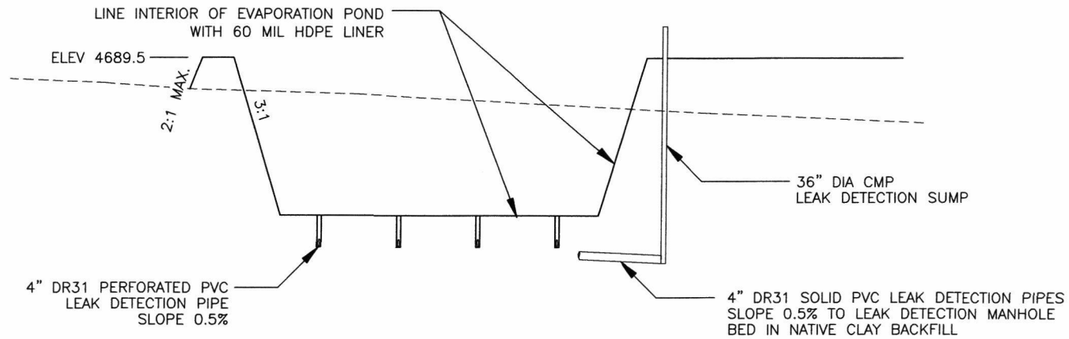

EVAPORATION POND #4 TRANSVERSE SECTION

SCALE 1" = 100' HORIZONTAL
SCALE 1" = 10' VERTICAL

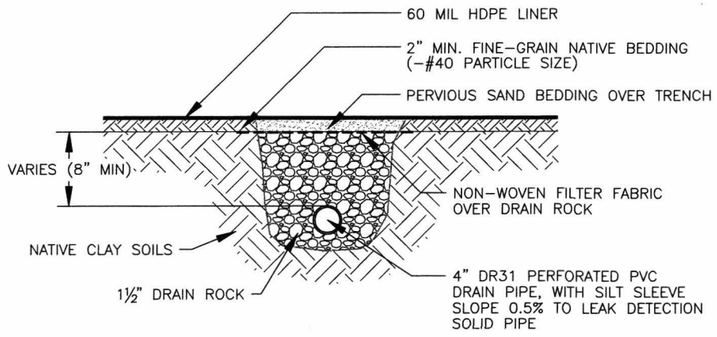

LEAK DETECTION COLLECTION PIPE

NO SCALE

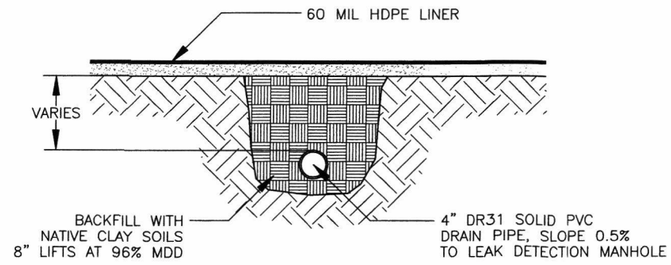

LEAK DETECTION SOLID PIPE

NO SCALE

SHEET 4 OF 4

ORIGINAL BY ____ DATE ____
REVISIONS
BY PAH DATE 3/11/03
BY ____ DATE ____
BY ____ DATE ____

Engineering Services, Inc.
P.O. Box 1485
Vernal, Utah 84078
(435) 781-2550

BRENNAN BOTTOM DISPOSAL
PRODUCED WATER
EVAPORATIVE PIT #4
UINTAH COUNTY

SECTION AND DETAILS

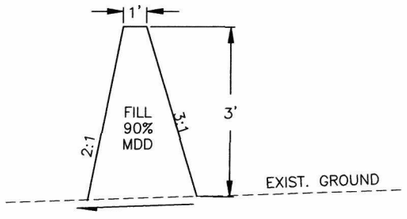

BERM DETAIL

NO SCALE

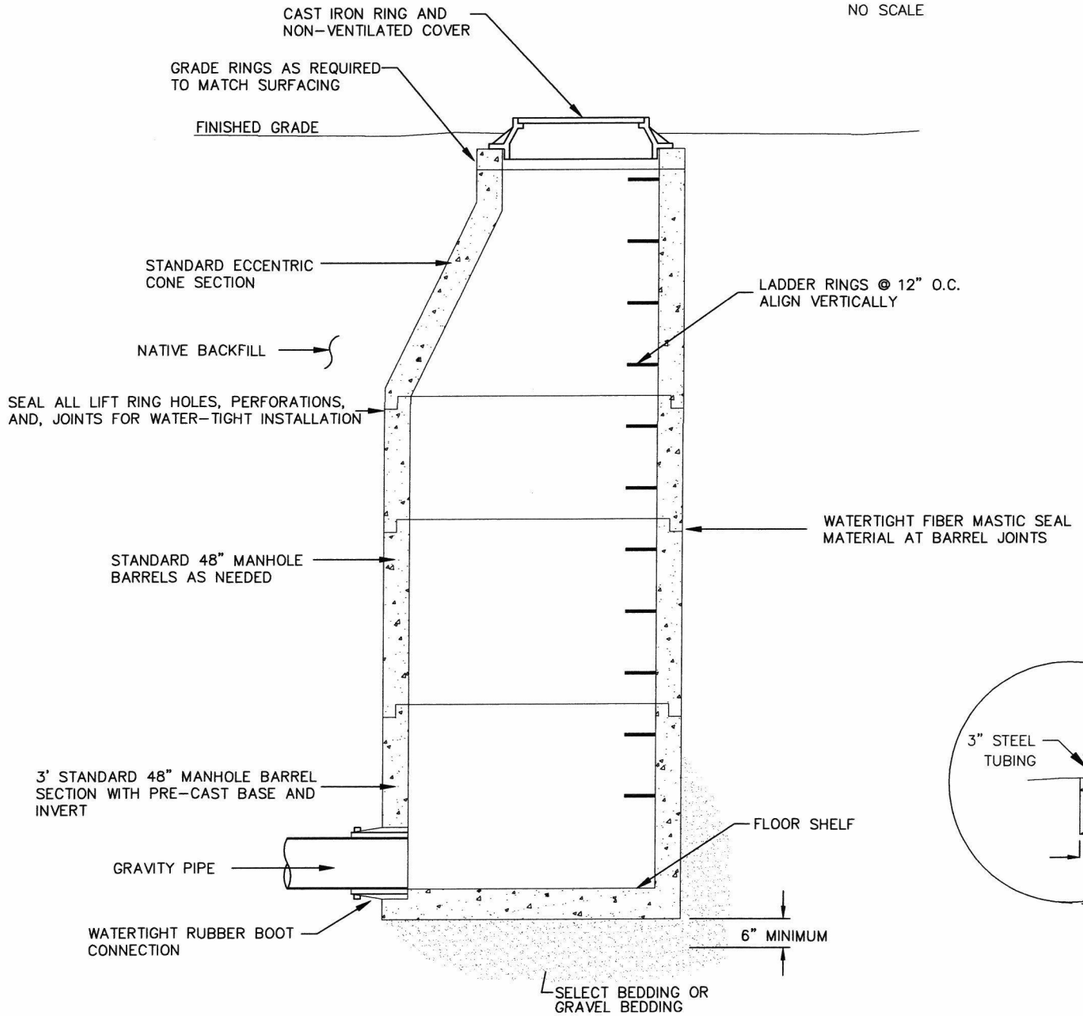

LEAK DETECTION MANHOLE

SCALE: NOT TO SCALE

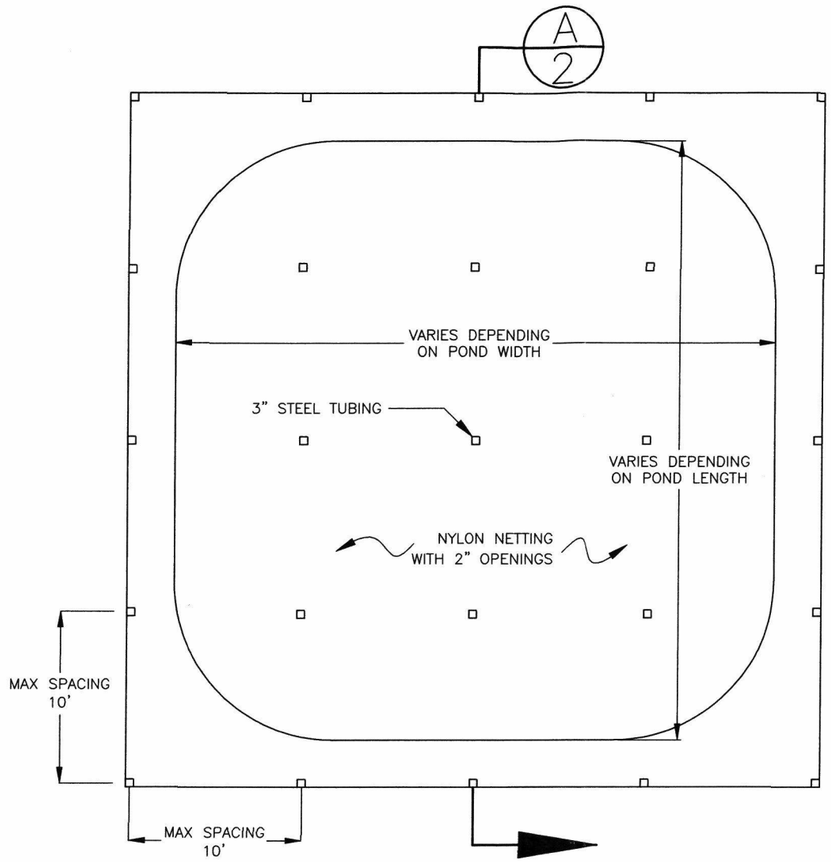

BIRD RESTRAINING NETTING

NO SCALE

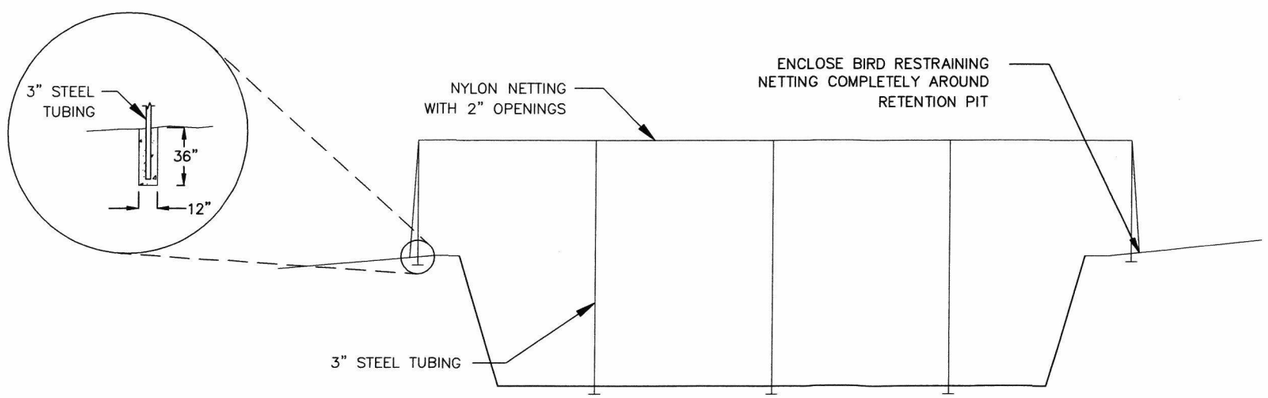

SECTION A-2

NO SCALE

SHEET 5 OF 5

ORIGINAL BY ____ DATE ____

REVISIONS
1 BY ____ DATE ____
2 BY ____ DATE ____
3 BY ____ DATE ____

Engineering Services, Inc.
P.O. Box 1485
Vernal, Utah 84078
(435) 781-2550

DEMILLE PRODUCED WATER DISPOSAL FACILITY
UINTAH COUNTY

SECTION AND DETAILS

Appendix E

Brennan Bottoms Disposal

E&P Solid Waste Disposal Facility - Solid Waste Log

General Information				Waste Origin			
Date	Waste Type (Drilling Mud, Etc.)	Waste Quantity (Cu. Yds.)	Waste Quantity (Tons)	Waste Producer (Company Name)	Source Location (Well Pad #)	Waste Transporter (Company Name)	Facility Opperator (Initials)

WEEKLY LEAK DETECTION & INSPECTION REPORT

Date Inspected	Inspection Point or Pit Number																		Inspectors Name
	#1	#2	#3	#4	#5	#6	#7	#8	#9	#10	#11	#12	#13	#14	#15	#16	#17	#18	

* Inspection Codes:
D = Dry
W = Wet

Any water in the Leak Detection System Must Be Reported to the Division of Oil, Gas & Mining, within 24 Hours.

I the undersigned certify, to the best of my knowledge, that the information presented in this report is accurate, and reflects the actual observations at my facility.

Operator Signature_____ Date:_____

Failure to report quarterly could result in temporary or permanent closure of your facility.

Appendix F

12/22/2014

Brennan Bottoms Landfill Proj. Num. 14120V

Post Closure Cost Calculations

Post Closure Inspections	2	inspections per year
	2.5	hours per inspection
	5	hours per year
	$35	per hour
	$175	Per year
	$875	for inpsections for 5 years
Re-seeding (if necessary)	1,556	sq. yds.
	$ 0.33	per sq. yard
	$ 513.33	estimate 2 years to establish vegetation
Total Post Closure Costs	**$ 1,388.33**	

12/22/2014

Brennan Bottoms Landfill Proj. Num. 14120V
Closure Cost Calculations

Land Fill Area		14,000	sq. ft.
		1556	sq. yds.
1.5' Compacted Native Cover Volume		778	cu. Yds.
Unit Cost	$	25.00	per cu. Yd.
Total Cost	**$**	**19,444**	
6" Native Topsoil and Reseeding		259	cu. Yds.
Unit Cost	$	3.50	per cu. Yd.
Total Cost	**$**	**907**	
Stormwater Polution Prevention Maintenance		**$6,000**	lump
Total Closure Costs		**$26,352**	

OLD HICKORY
INSURANCE AGENCY

Renewal Report

For Period 1/01/2014 thru 1/31/2014
Printed on 11/01/2013 at 9:59AM

Old Hickory Insurance Agency
12890 Lebanon Road
Mount Juliet, TN 37122
(615) 553-9500
Submissions@LexonSurety.com

Risk Managers Insurance Inc
5679 So. Redwood Road #25
Salt Lake City, UT 84123

Dear Customer,
The bonds listed below are approaching the end of their current term. Renewal requires your request. Please review each item and provide direction on your preference in handling the renewal processing. A prompt return of this completed worksheet will aid in the timely handling of the renewal. Please notify us in the event you would prefer that we re-issue or cancel the bond(s in question.

Principal: Brennan Bottom Water Disposal, LLC Obligee: State of Utah

Bond #	Expiration	Bond Amount	Premium Amount	Surcharge	Renew	Cancel
5010052-9	1/26/2014	$2,013,308.00	$50,333.00			

11-5-13
PLEASE RENEW - ADVISE US of ANY requirements.
THANK-YOU,

NOV 5 2013
BY:

Note A: To consider renewal, please submit updated company financial statements.
Note B: To consider renewal, please submit updated personal financial statements of each indemnitor.
Note C: To consider renewal, please submit an updated application.
Note D: To consider renewal, please submit an updated consent form.
Note E: Additional information is necessary to consider the renewal. Please contact your underwriter for more information.

Risk Managers Insurance, Inc.
Box 571766
Salt Lake City, UT 84157

Invoice

DATE	INVOICE #
11/11/2013	1438

TOTAL	ENCLOSED
$0.00	

BILL TO

BRENNAN BOTTOM WATER DISPOSAL LLC
Attn: BRENNAN BOTTOM
RT 2 BOX 2060
ROOSEVELT, UT 84066

Paid

AGENT	DUE DATE
JMS	01/10/2014

DESCRIPTION	AMOUNT
Annual Premium on Bond #5010052-10-1	50,333.00
Payment on 12/30/2013 INV #1438	-50,333.00

Thank you for your business.

TOTAL $0.00

Please remit and make check payable to:
Risk Managers Insurance, Inc.
Box 571766
Salt Lake City, UT 84157
801-262-3525
License Number: 381930