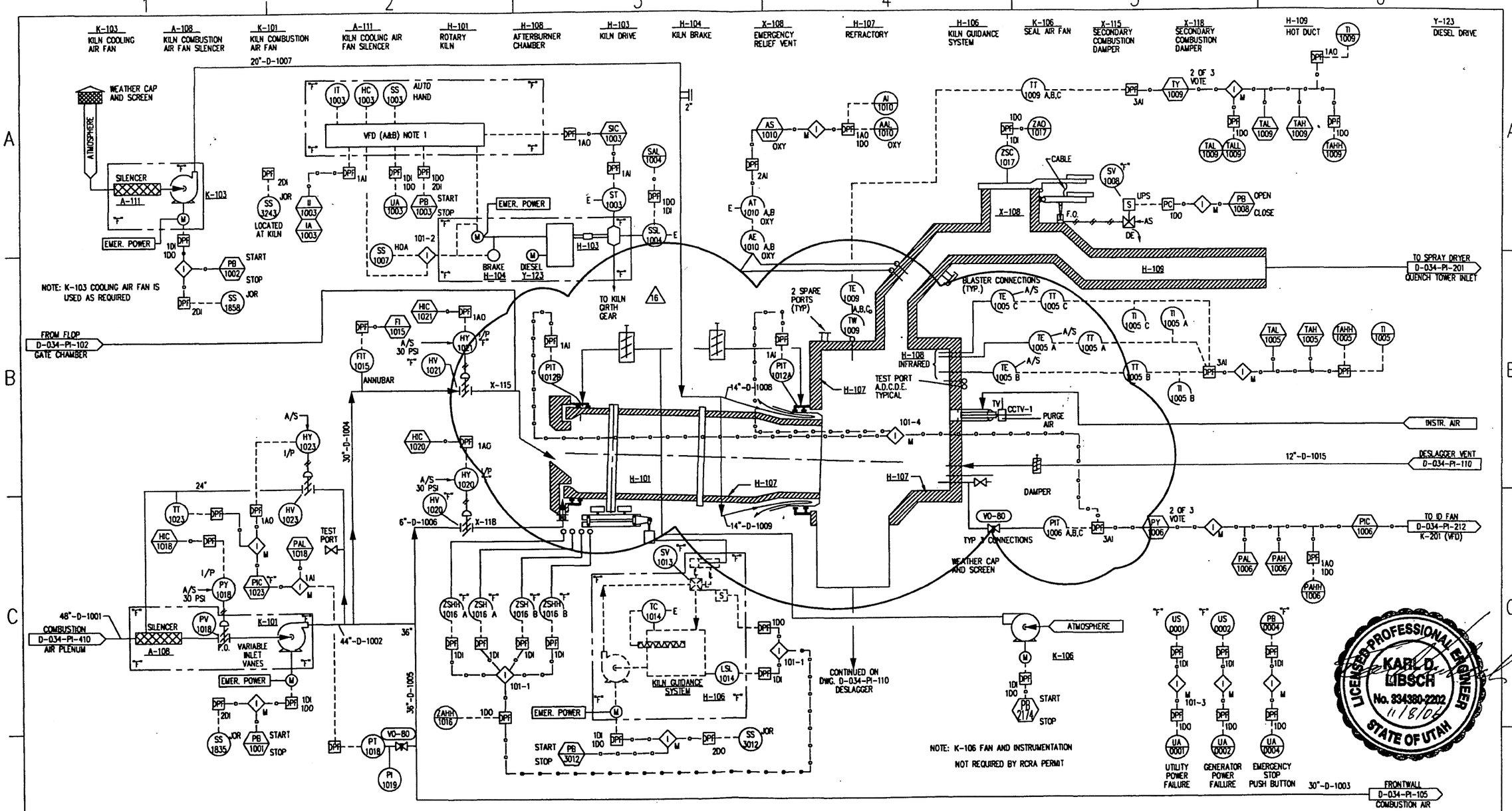

NOTE 1. ONLY ONE VFD AT A TIME IS USABLE. ALL SIGNALS ARE SWITCHABLE WITH THE VFD.

INTERLOCK DESCRIPTION

M MASTER INTERLOCK SYSTEM
101-1 KILN GUIDANCE CONTROL - REVERSES DIRECTION, STOPS GUIDANCE DRIVE ON HH.
101-2 WHEN VFD IS ENERGIZED, H-104 BRAKE IS RELEASED. BRAKE ENGAGES WHEN KILN STOPS.
101-3 RESTART SEQUENCE ON EMERGENCY DIESEL GENERATOR.

REVISIONS

NO	DESCRIPTION	DATE	BY	CHK		ENG MGR
5	ADDED FLOP GATE VENT LINE	06-13-02	LC			CHW
6	ADDED THIRD INFRARED	11-2-06	KL			
7	ADDED VFD & BLASTER CONNECTIONS	03-12-96	DCP			
8	AS BUILT	12-11-96	CRM			
9	AS BUILT	03-19-97	CRM			

REVISIONS

NO	DESCRIPTION	DATE	BY	CHK		ENG MGR
10	ADDED ANNUBAR AND REMOVED ORIFICE PLATE	02-02-98	CRM			
11	TO CORRECT DRAFTING ERRORS	04-06-98	CRM			
12	ADDED DESLAGGER VENT LINE	07-01-98	CRM			
13	MOVED PIT 1006A,B,C	12-15-98	CRM			
14	RELOCATED DESLAGGER VENT LINE	10-28-99	GVC			

APPROVALS

	BY	DATE
DRAWN	CRM	03-19-97
CHECKED		
ELEC		
MECH		
STRUCT		
PROJECT ENG		
ENGINEERING MGR		
AS BUILT		

REGISTERED PROFESSIONAL ENGINEER
DATE:_____

CleanHarbors
ARAGONITE, LLC

TITLE
UTAH ENVIRONMENTAL SERVICE CENTER
INCINERATION PLANT FOR INDUSTRIAL WASTES
P&ID SLAGGING ROTARY KILN SYSTEM

FOR TOOELE SITE
CAD NO. 14766Y
SCALE
JOB NO
SAFETY-KLEEN DWG NO D-034-PI-101
REV 16