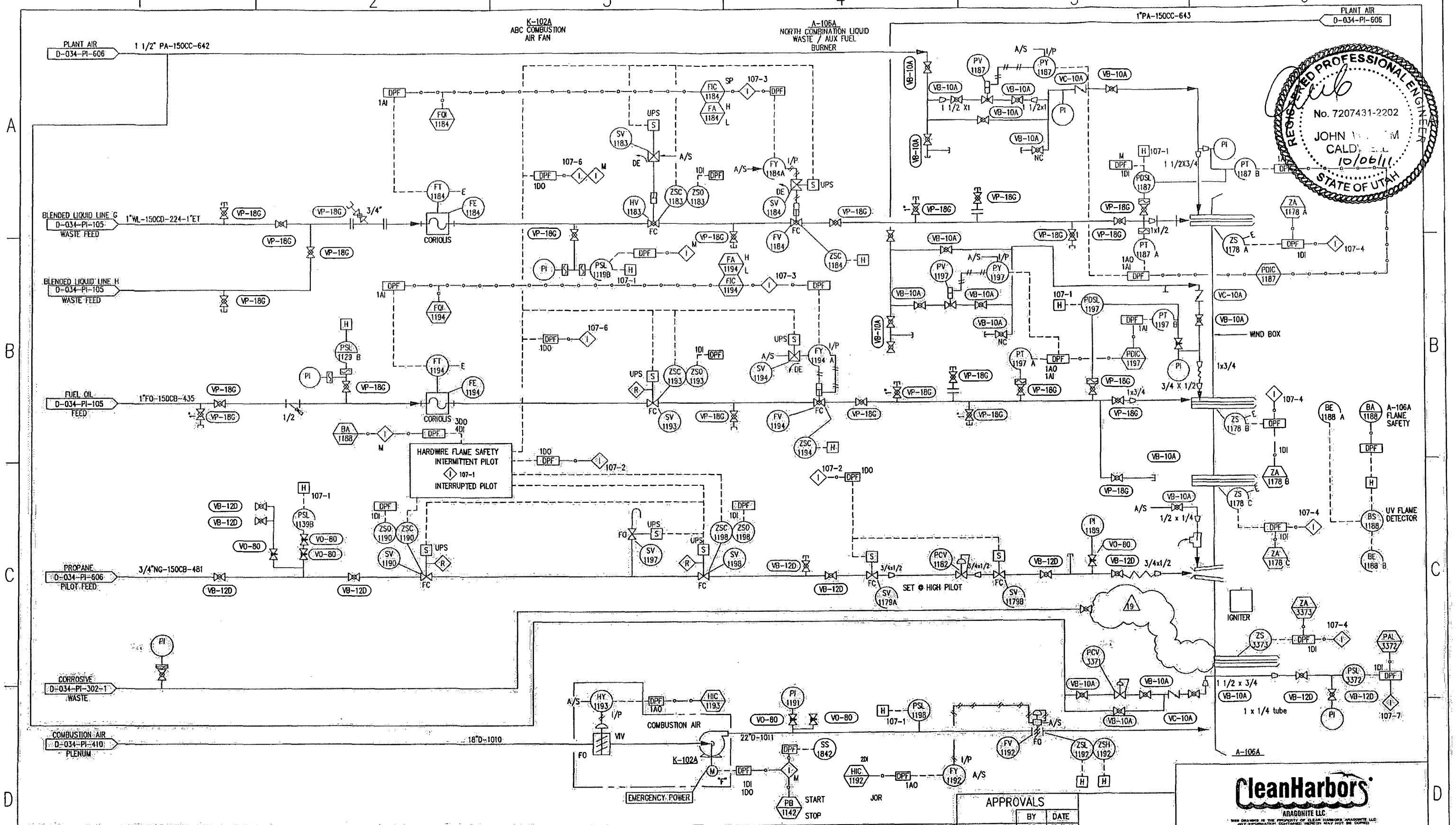

INTERLOCK DESCRIPTION

M MASTER INTERLOCK SYSTEM
107-1 HARDWIRE BURNER MANAGEMENT SYSTEM
107-2 ALLOWS USE OF INTERMITTENT PILOT WHEN TEMPERATURE OVER 1400 F
107-3 VALVE CLOSED OR MIN FIRE BEFORE BLOCK VALVE CAN BE OPENED.
107-4 LANCE IN POSITION BEFORE VALVE CAN OPEN

107-6 FUEL SELECT (RELAY CONTACT CLOSED BY DPF)
107-7 MINIMUM PRESSURE REQUIRED TO OPERATE SYSTEM

REVISIONS

NO	DESCRIPTION	DATE	BY	CHK	MECH	ENG MGR
4	REMOVED REF. FROM DWG. PI-105	12-11-00	GVC			
5	AS BUILT	5-15-02	LCC			
6	REMOVED LOW PILOT, HARDPIPED FO & BLEND,					
	GENERAL REVISION	04-19-06	KL/LC			
7	ADDED CORROSIVE WASTE	2-22-2008	KL			

REVISIONS

NO	DESCRIPTION	DATE	BY	CHK	ENG MGR
8	CHANGED FUEL OIL FLOWMETER TO CORIOLIS	04-21-08	KL		
9	DELETE REF TO FUTURE CORROSIVE LINE TO A. B.	09-09-11	TJK		
2	ADDED PRESSURE SWITCH & SOLENOID VALVES	11-10-98	CRM		
3	ADDED COOLING AIR TO BURNER	07-12-99	GVC		

APPROVALS

	BY	DATE
DRAWN	GVC	07-12-99
CHECKED		
ELEC		
MECH		
STRUCT		
PROJECT ENG		
ENGINEERING MGR		
AS BUILT		

REGISTERED PROFESSIONAL ENGINEER
DATE:

CleanHarbors
ARAGONITE LLC

TITLE
UTAH ENVIRONMENTAL SERVICE CENTER
INCINERATION PLANT FOR INDUSTRIAL WASTES
P&ID AFTERBURNER CONTROLS SHEET 1

FOR TOOELE SITE
CAD NO. IH768AE
SCALE: NA
JOB NO
SAFETY-KLEEN DWG NO: D-034-PI-107
REV. 19