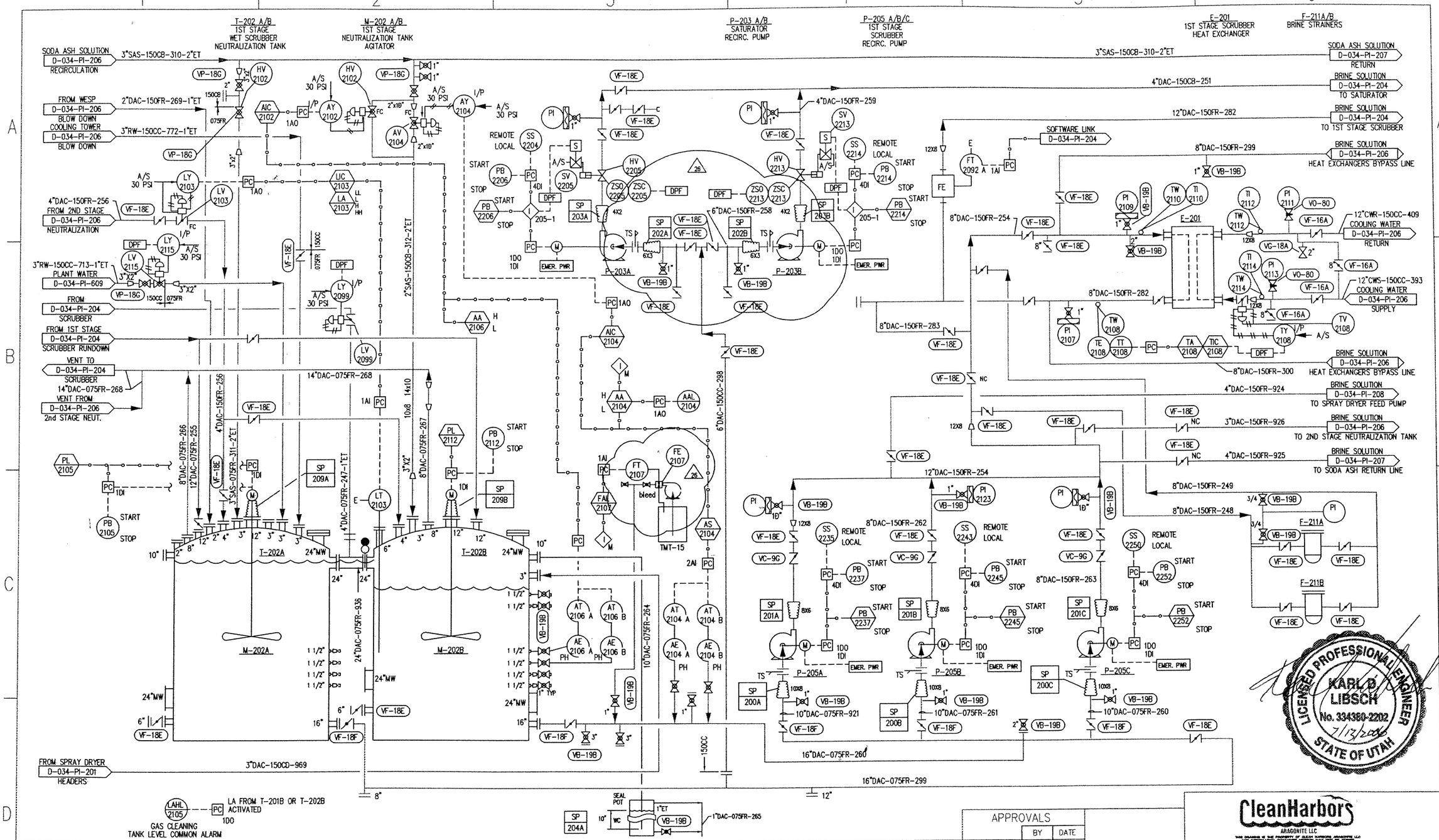


## INTERLOCK DESCRIPTION

M - MASTER INTERLOCK SYSTEM
205-1 VALVE TO OPEN WHEN PUMP IS STARTED.

## REVISIONS

| NO | DESCRIPTION | DATE | BY | CHK | MECH | ENG MGR |
|---|---|---|---|---|---|---|
| | CHANGED LINE FROM 150FR TO 150CC, ADDED | | | | | |
| | SPECTACLE BLIND, & ADDED PI'S | | | | | |
| 23 | ADD (2) 1-1/2" VALVES TO TANK M-202B | 11-07-01 | LC | | | |
| 24 | MODIFIED SODA ASH DELIVERY, PH LOCATIONS | 05-09-02 | KL | | | |
| 25 | ADDED TMT-15 INJECTION | 10-12-05 | LCC | | | |

## REVISIONS

| NO | DESCRIPTION | DATE | BY | CHK | MECH | ENG MGR |
|---|---|---|---|---|---|---|
| 26 | ADDED SATURATOR DRAIN VALVES | 06-16-06 | KL | | | |
| | TO SODA ASH. REMOVED LINE 1"RW-150CC-768 & | | | | | |
| | REF. FROM PI-204 & NOTES | | | | | |
| 22 | ADDED PUMP P-217A & 8" CLEANOUT | 3-14-01 | GVC | | | |
| | REMOVED LINE 6"DAC-150FR-257 | | | | | |

## APPROVALS

| | BY | DATE |
|---|---|---|
| DRAWN | CRM | 09-03-97 |
| CHECKED | | |
| ELEC | | |
| MECH | | |
| STRUCT | | |
| PROJECT ENG | | |
| ENGINEERING MGR | | |
| AS BUILT | | |

REGISTERED PROFESSIONAL ENGINEER
DATE:_____

CleanHarbors
ARAGONITE LLC

THIS DRAWING IS THE PROPERTY OF CLEAN HARBORS ARAGONITE LLC
ANY INFORMATION CONTAINED HEREIN MAY NOT BE SOLD OR USED WITHOUT WRITTEN PERMISSION OF OWNER

TITLE
UTAH ENVIRONMENTAL SERVICE CENTER
INCINERATION PLANT FOR INDUSTRIAL WASTES
P&ID 1ST STAGE NEUTRALIZATION SYSTEM

| FOR | CAD NO. |
|---|---|
| TOOELE SITE | IH763AE |

| SCALE | JOB NO | SAFETY-KLEEN DWG NO | REV |
|---|---|---|---|
| NA | | D-034-PI-205 | 26 |