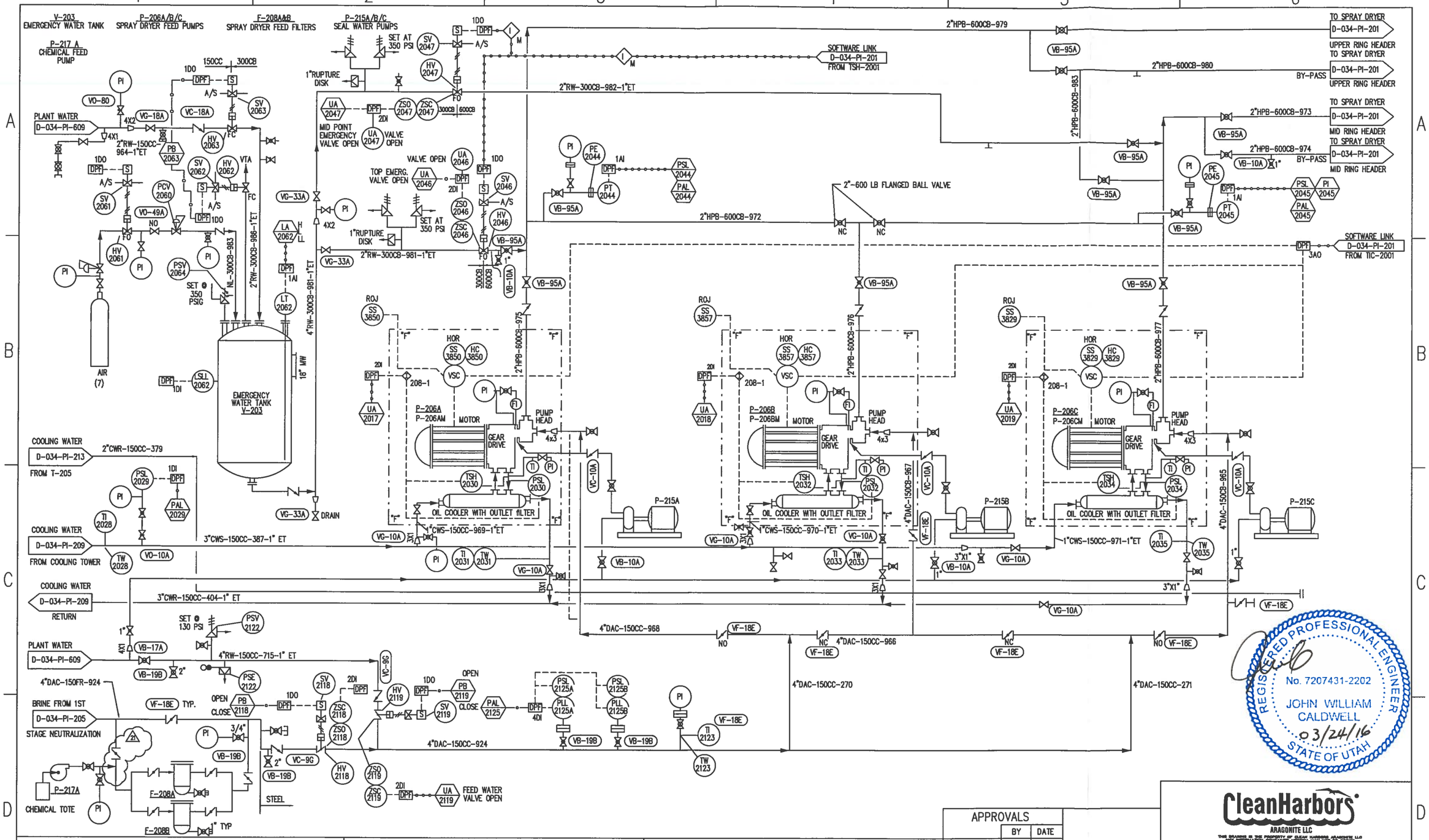

INTERLOCK DESCRIPTION

208-1 COOLING AND LUBRICATION OPERATING BEFORE PUMP STARTS.

REVISIONS

NO	DESCRIPTION	DATE	BY	CHK		ENG MGR
20	AS BUILT	12-04-06	KL			
21	MOVED BUTTERFLY VALVE	3-23-16	MM	LB		
	ADDED TEES AND VALVES FOR BY-PASS LINES					
15	ADDED BY-PASS LINES	10-25-99	GVC			
16	CHANGED INLET AND OUTLET PIPING	5-30-00	GVC			

REVISIONS

NO	DESCRIPTION	DATE	BY	CHK		ENG MGR
	TO STEEL					
17	CHANGED VALVE TYPE	12-13-00	GVC			
18	ADDED CHEMICAL FEED PUMP AND	4-11-01	GVC			
	AS BUILT STRAINER AREA					
19	AS BUILT	05-10-02	KL			

APPROVALS

	BY	DATE
DRAWN	GRM	03-13-97
CHECKED		
ELEC		
MECH		
STRUCT		
PROJECT ENG		
ENGINEERING MGR		
AS BUILT		

REGISTERED PROFESSIONAL ENGINEER
DATE:

CleanHarbors®
ARAGONITE LLC

THIS DRAWING IS THE PROPERTY OF CLEAN HARBORS ARAGONITE LLC ANY INFORMATION CONTAINED HEREON MAY NOT BE COPIED OR USED WITHOUT WRITTEN PERMISSION OF OWNER.

TITLE
UTAH ENVIRONMENTAL SERVICE CENTER
INCINERATION PLANT FOR INDUSTRIAL WASTES
P&ID SPRAY DRYER FEED SYSTEM

FOR TOOELE SITE | CAD NO. 0681001
SCALE | JOB NO | SAFETY-KLEEN DWG NO D-034-PI-208 | REV 21