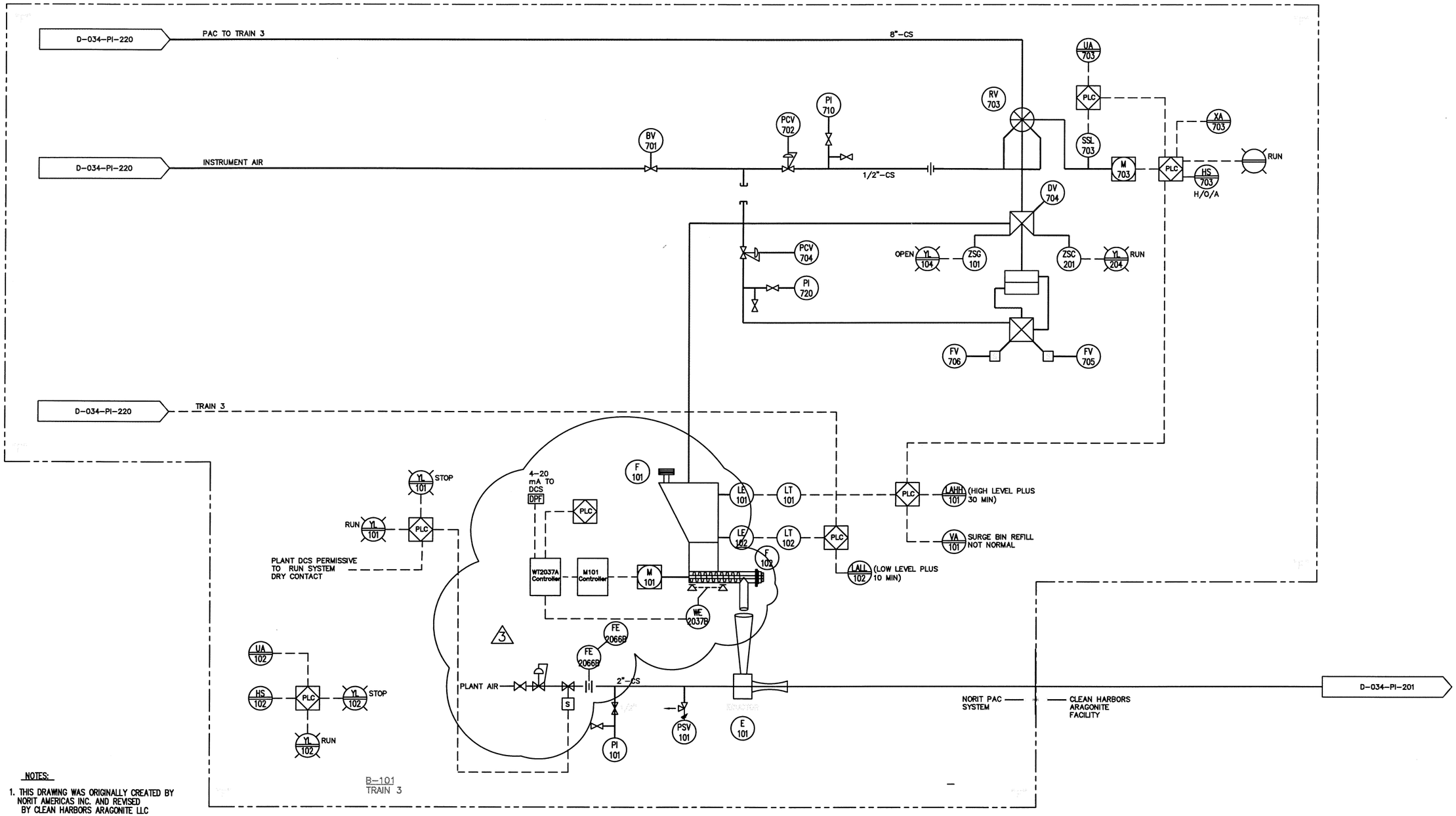


NOTES:

1. THIS DRAWING WAS ORIGINALLY CREATED BY NORIT AMERICAS INC. AND REVISED BY CLEAN HARBORS ARAGONITE LLC
2. NORIT AMERICA'S P&I NUMBERING SYSTEM IS USED INSIDE THEIR PACKAGE LIMITS

REVISIONS

| NO | DESCRIPTION | DATE | BY | CHK | ENG MGR |
|---|---|---|---|---|---|
| 3 | ADDED LOSS IN WEIGHT - REMOVED BLOWER | 3-5-04 | TS | | |
| 2 | 303 WAS 301 AND REMOVED PROPRIETARY STATEMENT | 02-15-01 | GVC | BC | |
| 1 | AS BUILT PAC SYSTEM | 02-12-01 | GVC | BC | |
| 0 | INITIAL DESIGN BY NORIT AMERICA | 09-28-00 | JKM | BC | |

REVISIONS

| NO | DESCRIPTION | DATE | BY | CHK | ENG MGR |
|---|---|---|---|---|---|
| | | | | | |

APPROVALS

| | BY | DATE |
|---|---|---|
| DRAWN | | |
| CHECKED | | |
| ELEC | | |
| MECH | | |
| STRUCT | | |
| PROJECT ENG | | |
| ENGINEERING MGR | | |
| AS BUILT | | |

REGISTERED PROFESSIONAL ENGINEER
DATE:_____

CleanHarbors ARAGONITE LLC

THIS DRAWING IS THE PROPERTY OF CLEAN HARBORS ARAGONITE LLC ANY REPRODUCTION CONTAINING HEREON MAY NOT BE COPIED OR USED WITHOUT WRITTEN PERMISSION OF OWNER.

TITLE
UTAH ENVIRONMENTAL SERVICE CENTER
INCINERATION PLANT FOR INDUSTRIAL WASTES
PAC DOSING SYSTEM TRAIN 3
P&ID

FOR

CAD NO. LC102D

SCALE NTS

JOB NO

Clean Harbors DWG No. D-034-PI-222

REV 3