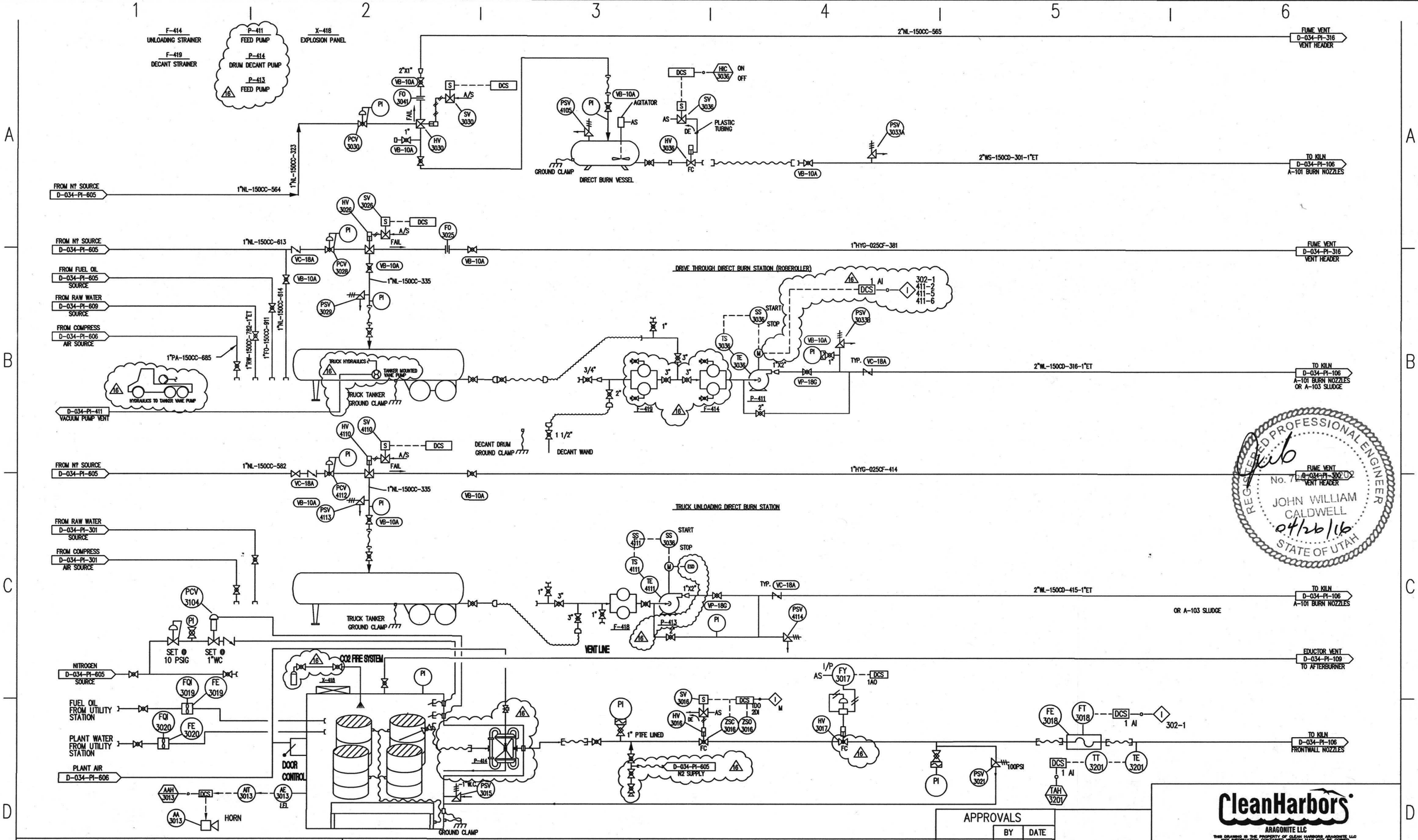

INTERLOCK DESCRIPTION

M – MASTER INTERLOCK SYSTEM DWGS: D-034-PI-003 & 004

302-1 FLOW LIMIT IS DETERMINED BY THE PORT BEING USED
411-2 <60% LEL
411-5 K-407 RUNNING
411-6 HV-4086 OPEN

REVISIONS

NO	DESCRIPTION	DATE	BY	CHK		ENG MGR
8	AS-BUILT DIRECT BURN STATIONS	03-19-02	MU	IRB		JV
9	ADDITIONAL HOOKUP PIPE	11-26-02	GVC	KL		
	SYSTEM					
10	ADDED DRUM DECANT PIPING	04-16-03	KL			
11	ADDED VAC PUMP AND VENT	04-24-03	LC			

REVISIONS

NO	DESCRIPTION	DATE	BY	CHK		ENG MGR
12	ADDED MANUAL VALVE	09-15-03	LCC			
13	ADDED DRUM PUMPING STATION	11-5-03	KL			
14	ADDED SECOND SHEET	12-05-07	KL			
15	REPLACED SV3017 WITH FY3017	09-12-11	LCC			
16	DWG CORRECTION AND PSM UPDATES	04-22-16	MM	LB		

APPROVALS

	BY	DATE
DRAWN	CRM	04-13-98
CHECKED		
ELEC		
MECH		
STRUCT		
PROJECT ENG		
ENGINEERING MGR		
AS BUILT		

REGISTERED PROFESSIONAL ENGINEER
DATE:_____

REGISTERED PROFESSIONAL ENGINEER No. 7 JOHN WILLIAM CALDWELL 04/26/16 STATE OF UTAH

CleanHarbors
ARAGONITE LLC

THIS DRAWING IS THE PROPERTY OF CLEAN HARBORS ARAGONITE LLC ANY INFORMATION CONTAINED HEREON MAY NOT BE COPIED OR USED WITHOUT WRITTEN PERMISSION OF OWNER.

TITLE
UTAH ENVIRONMENTAL SERVICE CENTER
INCINERATION PLANT FOR INDUSTRIAL WASTES
P&ID DIRECT BURN WASTE LIQUID UNLOADING

FOR	TOOELE SITE	CAD NO.	IH790AS
SCALE	JOB NO	SAFETY-KLEEN DWG NO	REV
		D-034-PI-302-1	16