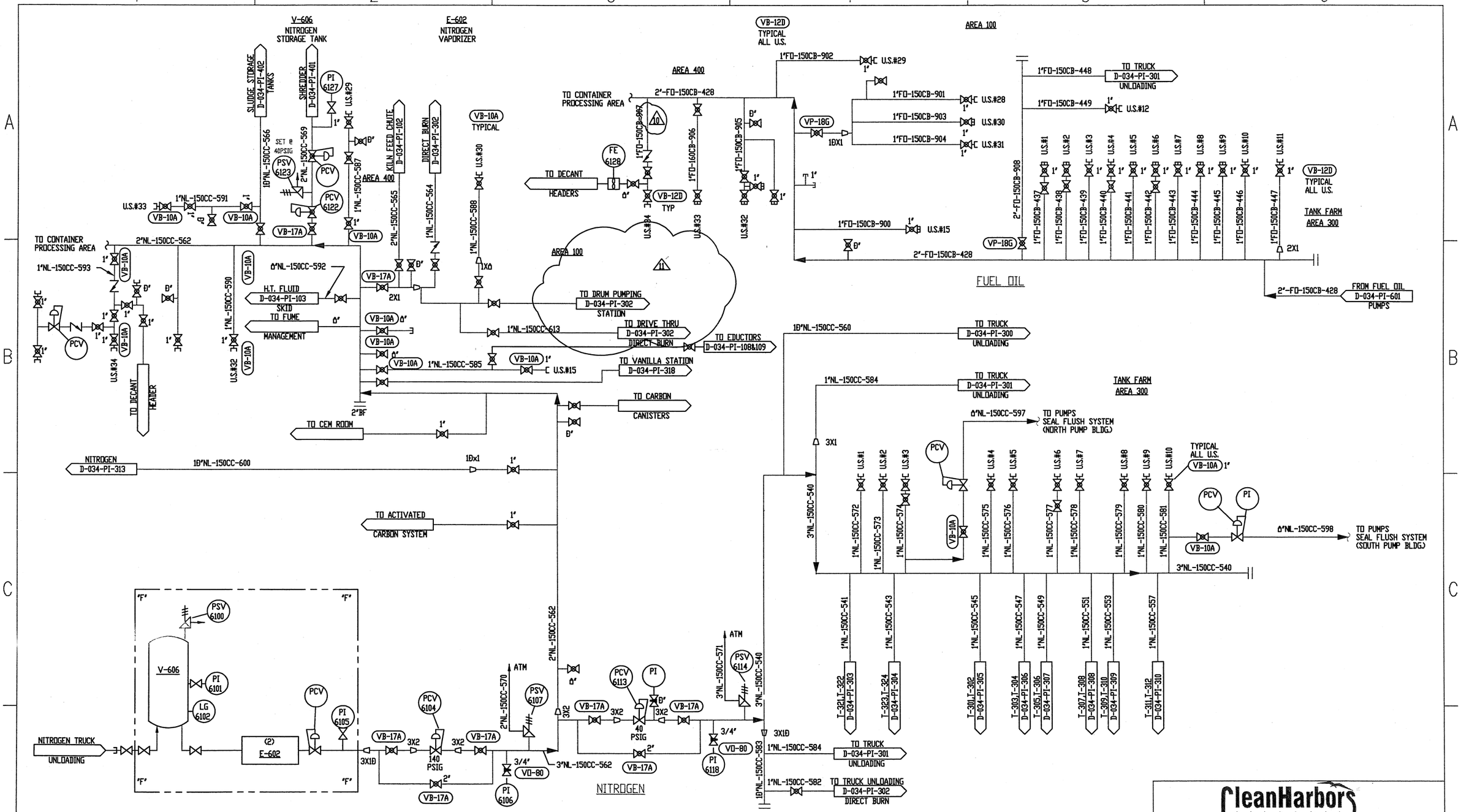

INTERLOCK
DESCRIPTION

REVISIONS								
NO	DESCRIPTION	DATE	BY	CHK	ELEC	MECH	STR	PROJ MGR
10	ADDED NITROGEN PIPING TO	06-06-03	KL					
	EDUCTOR AND VANILLA STN, CORRECTIONS							
11	ADDED DRUM PUMPING N2 LINE	10-31-03	KL					
5	ADDED 1"NL-150CC-612	1-10-01	GVC					
6a	MOVE TANKER DIRECT BURN	12-10-01	KL					
7	ADDED N2 LINE TO KILN FEED CHUTE	03-04-02	LCC					
8	ADDED TRUCK UNLOAD DIRECT BURN	03-14-02	LCC					
9	SWITCHING POTS REMOVED	06-05-02	KL					

REFERENCE DRAWINGS	
DRAWING NO	TITLE

REGISTERED PROFESSIONAL ENGINEER
DATE:_____

APPROVALS	BY	DATE
DRAWN	DCP	03-01-94
CHECKED		
LEAD ENG.		
ELEC CHECK		
MECH CHECK		
STRUCT CHECK		
PROJECT ENG		
PROJECT MGR		

CURRENT DRAWING STATUS	BY	DATE
PRELIMINARY OR PLANNING		
APPROVED FOR FINAL DESIGN		
APPROVED FOR QUOTE/PURCH		
APPROVED FOR CONSTRUCTION		
AS-BUILT		

CleanHarbors
ARAGONITE, LLC

THIS DRAWING IS THE PROPERTY OF CLEAN HARBORS ARAGONITE, LLC ANY INFORMATION CONTAINED HEREON MAY NOT BE COPIED OR USED WITHOUT WRITTEN PERMISSION OF OWNER.

TITLE
UTAH ENVIRONMENTAL SERVICE CENTER
INCINERATION PLANT FOR INDUSTRIAL WASTES
NITROGEN & FUEL OIL

FOR TOOELE SITE | CAD DISK FILE IH778S
SCALE | JOB NO | ENG. DWG NO | APTUS DWG NO D-034-PI-605 | REV 11