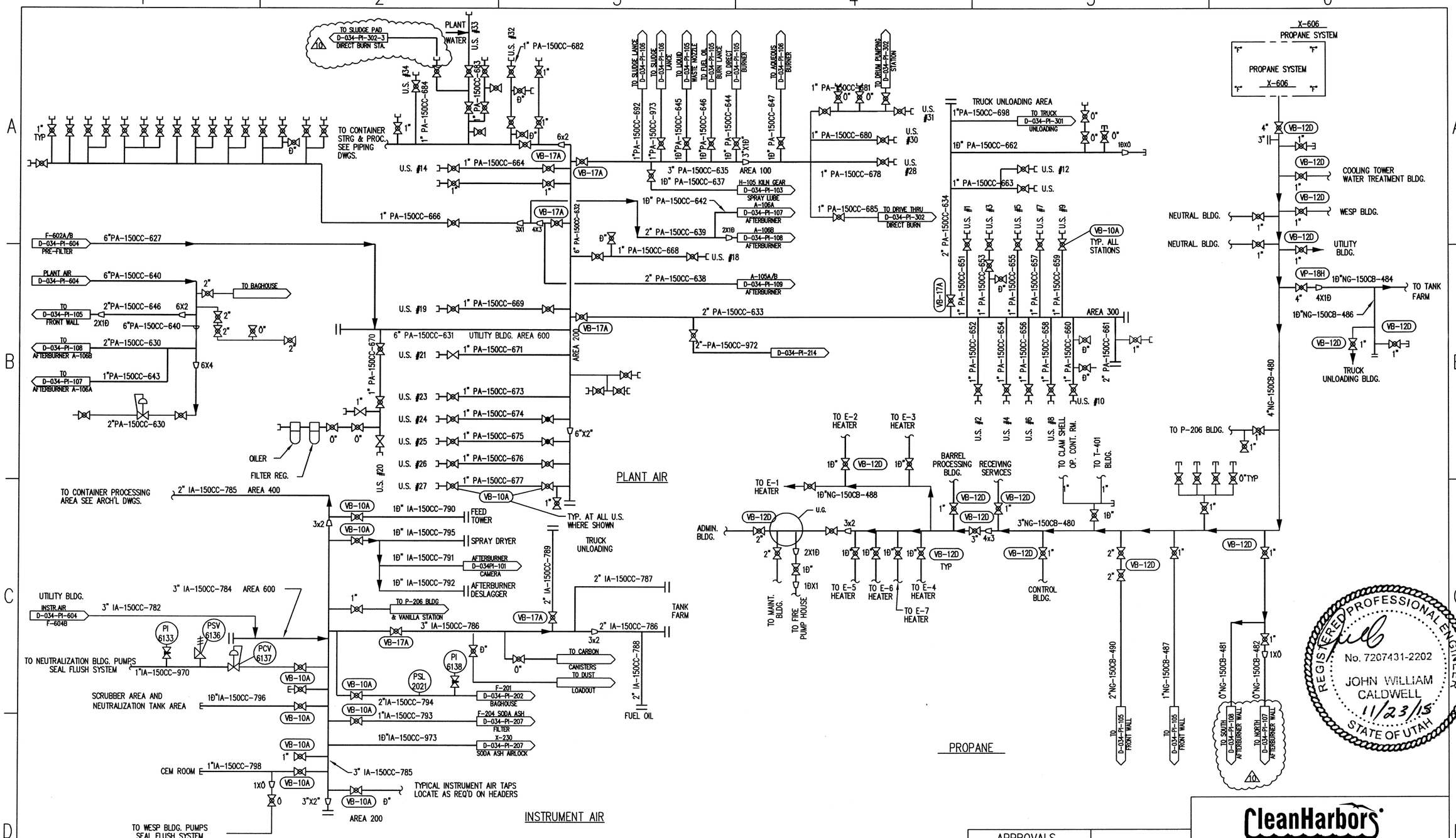

INTERLOCK DESCRIPTION

REVISIONS

NO	DESCRIPTION	DATE	BY	CHK		ENG MGR
6	ADDED TANKER DIRECT BURN U.S.	1-10-01	GVC			
7	ADDED TRUCK UNLOADING DIRECT BURN	03-19-02	KL			
	IN ADDITION TO DRIVE THRU DIRECT BURN					JV
8	ADDED VANILLA STATION, CORRECTIONS	06-10-03	KL			
9	ADDED DRUM PUMPING AIR LINE	10-31-03	KL			

REVISIONS

NO	DESCRIPTION	DATE	BY	CHK		ENG MGR
10	ADDED AIR CONN. TO SLUDGE PAD, FIXED PROPANE	11-19-15	MM	LB		
3	REMOVED PRESSURE SWITCH, CHANGED DRAWING #	11-16-98	CRM			
	& CHANGED ARCH'L TO PIPING					
4	LINE FOR PROPANE LANCE	04-12-99	CRM			
5	AS BUILT	10-9-00	GVC			

APPROVALS

	BY	DATE
DRAWN	CRM	11-16-98
CHECKED		
ELEC		
MECH		
STRUCT		
PROJECT ENG		
ENGINEERING MGR		
AS BUILT		

REGISTERED PROFESSIONAL ENGINEER
DATE:_____

CleanHarbors
ARAGONITE LLC

THIS DRAWING IS THE PROPERTY OF CLEAN HARBORS ARAGONITE LLC ANY REPRODUCTION, PUBLICATION OR USE MAY NOT BE COPIED OR USED WITHOUT WRITTEN PERMISSION OF OWNER.

TITLE
UTAH ENVIRONMENTAL SERVICE CENTER INCINERATION PLANT FOR INDUSTRIAL WASTES P&ID PLANT, INSTRUMENT AIR & PROPANE

FOR TOOELE SITE | CAD NO. EK930P
SCALE | JOB NO | SAFETY-KLEEN DWG NO D-034-PI-606 | REV 10