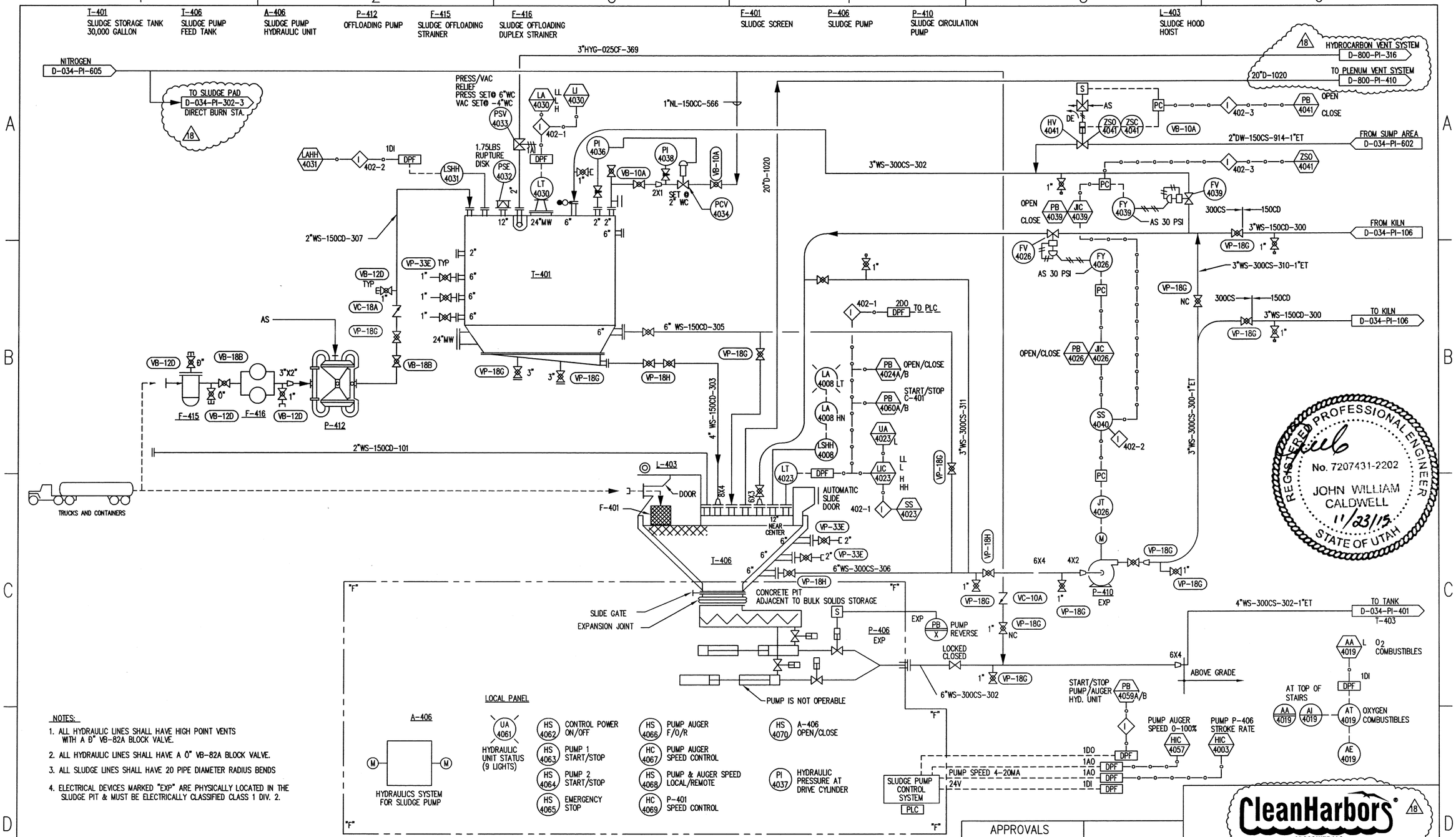

NOTES:

1. ALL HYDRAULIC LINES SHALL HAVE HIGH POINT VENTS WITH A Ø" VB-82A BLOCK VALVE.
2. ALL HYDRAULIC LINES SHALL HAVE A Ø" VB-82A BLOCK VALVE.
3. ALL SLUDGE LINES SHALL HAVE 20 PIPE DIAMETER RADIUS BENDS
4. ELECTRICAL DEVICES MARKED "EXP" ARE PHYSICALLY LOCATED IN THE SLUDGE PIT & MUST BE ELECTRICALLY CLASSIFIED CLASS 1 DIV. 2.

INTERLOCK DESCRIPTION

402-1 CONVEYOR INTERLOCKS: VALVE MUST BE OPEN BEFORE CNVYR STARTS. STOPS C-401 ON HIGH LEVEL.

402-2 VALVE FV-4039 TO CLOSE & VALVE FV-4026 TO OPEN ON TANK T-401 HIGH LEVEL.

402-3 VALVE HV-4041 TO CLOSE ON TANK T-401 HIGH LEVEL.

REVISIONS

NO	DESCRIPTION	DATE	BY	CHK	ENG MGR
3	ADDED PIPELINE 2"DW-150CB-914	7-11-00	GVC		
4	402-3 WAS 402-2. REMOVED C-401, X-402, X-412, AND RELATED HYDRAULICS	09-13-00	GVC		
15	ADDED PUMP P-412 & SYSTEM	2-28-01	GVC		
16	CHANGE SPEC. FROM 300CS TO 150CD	4-4-01	GVC		

REVISIONS

NO	DESCRIPTION	DATE	BY	CHK	ENG MGR
17	REMOVED OVERFLOW VENT AND INTERLOCK	07-22-98	CRM		
18	CORRECTED DRAWING REFERENCE AND LINE NUMBER	11-10-15	MM	LB	
	LINE,CHANGED INTERLOCK 402-2 & REMOVED				
	INTERLOCK 402-3				
12	ADDED NOTE AND LOCKED VALVE,ADDED LINE 101	05-18-99	CRM		

APPROVALS

	BY	DATE
DRAWN	GVC	10-19-95
CHECKED		
ELEC		
MECH		
STRUCT		
PROJECT ENG		
ENGINEERING MGR		
AS BUILT		

REGISTERED PROFESSIONAL ENGINEER
DATE:_____

CleanHarbors® ARAGONITE LLC

THIS DRAWING IS THE PROPERTY OF CLEAN HARBORS ARAGONITE, LLC ANY INFORMATION CONTAINED HEREON MAY NOT BE COPIED OR USED WITHOUT WRITTEN PERMISSION OF OWNER.

TITLE
UTAH ENVIRONMENTAL SERVICE CENTER
INCINERATION PLANT FOR INDUSTRIAL WASTES
P&ID SLUDGE HANDLING

FOR	CAD NO.	
TOOELE SITE	IH781	
SCALE: NA / JOB NO	SAFETY-KLEEN DWG NO: D-034-PI-402	REV: 18