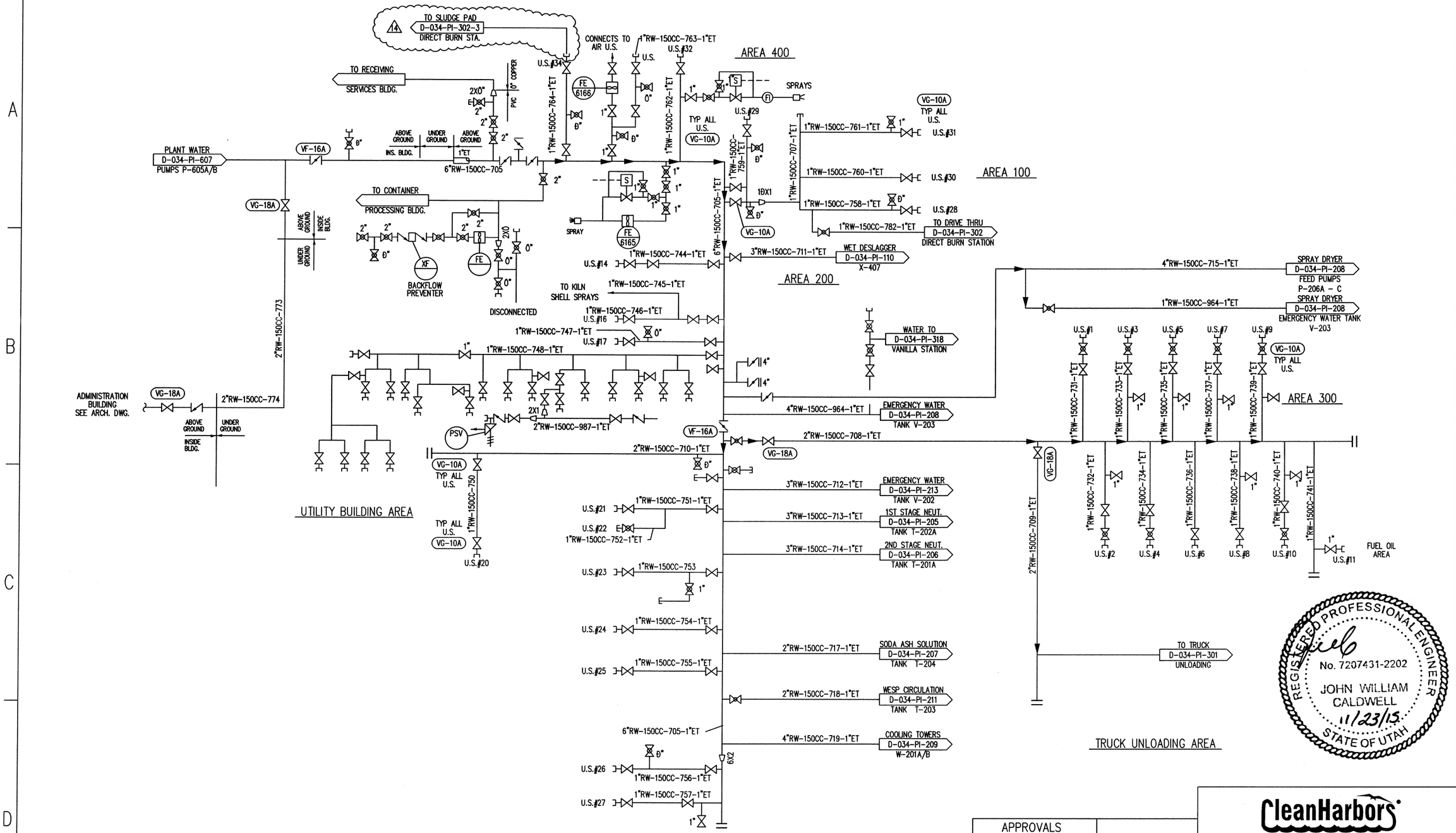

INTERLOCK DESCRIPTION

REVISIONS

NO	DESCRIPTION	DATE	BY	CHK		ENG MGR
9	ADDED UTILITY STATIONS	9-25-01	GVC			
10	ADDED TRUCK UNLOADING DIRECT BURN STATION	03-19-02	KL			
	IN ADDITION TO DRIVE THRU DIRECT BURN					
11	MODIFIED SD RAW WATER PIPING	05-09-02	KL			
12	ADDED ILINE FOR VANILLA STATION, CORRECTIONS	6-06-03	KL			

REVISIONS

NO	DESCRIPTION	DATE	BY	CHK		ENG MGR
13	ADDED BUTTERFLY VALVE	3-11-05	KL			
14	ADDED PLANT WATER CONNECTION TO SLUDGE PAD	11-19-15	MM	LB		
6	AS BUILT	10-12-00	GVC			
7	ADDED TANKER DIRECT BURN U.S.	1-10-01	GVC			
8	ADDED BLOCK VALVE.	3-27-01	GVC			

APPROVALS

	BY	DATE
DRAWN	KSO	11/9/88
CHECKED		
ELEC		
MECH		
STRUCT		
PROJECT ENG		
ENGINEERING MGR		
AS BUILT		

REGISTERED PROFESSIONAL ENGINEER
DATE:_____

CleanHarbors
ARAGONITE LLC

THIS DRAWING IS THE PROPERTY OF CLEAN HARBORS ARAGONITE LLC ANY INFORMATION CONTAINED HEREON MAY NOT BE COPIED OR USED WITHOUT WRITTEN PERMISSION OF OWNER.

TITLE
UTAH ENVIRONMENTAL SERVICE CENTER
INCINERATION PLANT FOR INDUSTRIAL WASTES
P&ID PLANT WATER

FOR	TOOELE SITE	CAD NO.	IK940Q
SCALE	JOB NO	APTUS DWG NO	D-034-PI-609
		REV	14