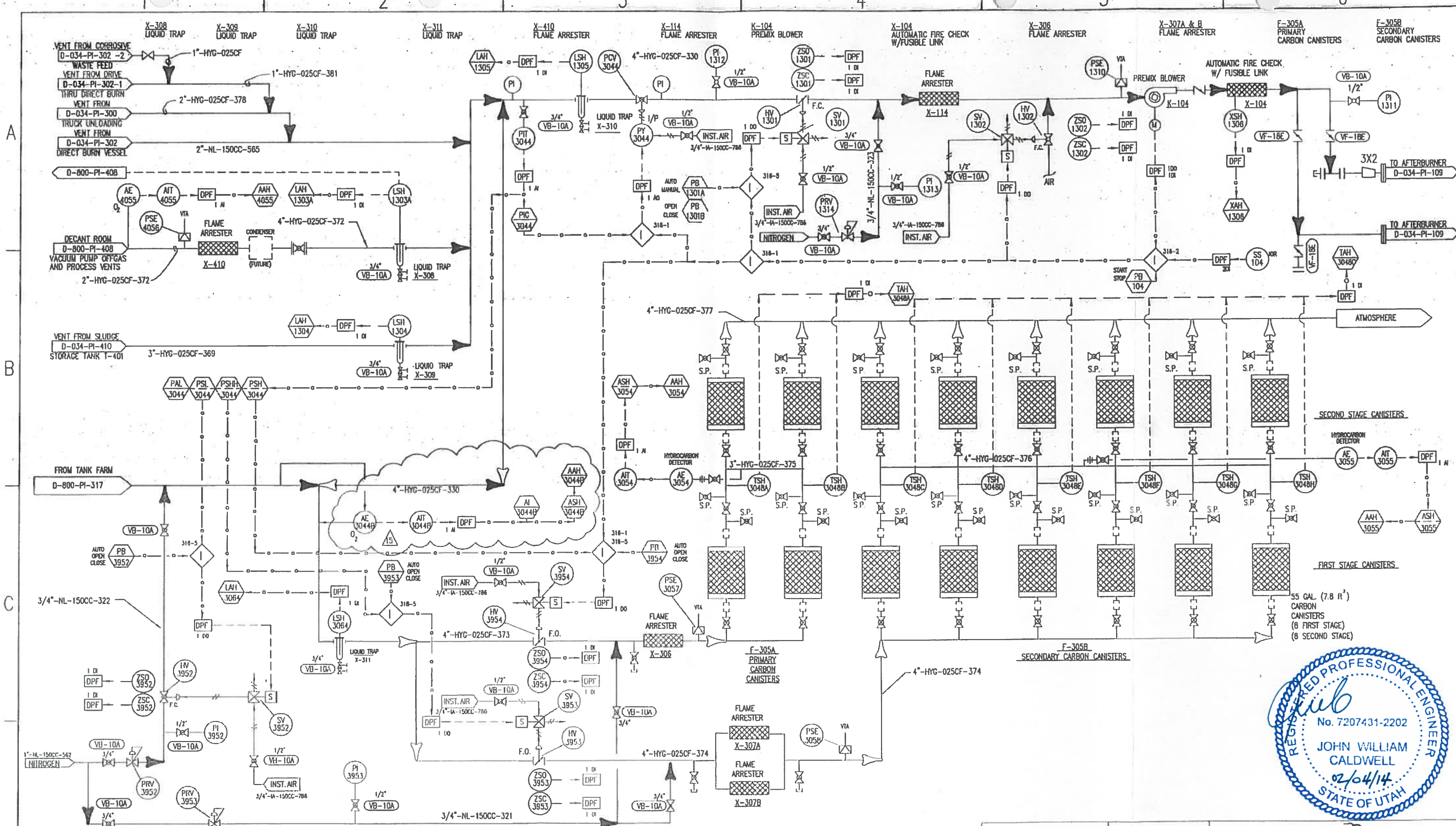

REGISTERED PROFESSIONAL ENGINEER No. 7207431-2202 JOHN WILLIAM CALDWELL 02/04/14 STATE OF UTAH

INTERLOCK DESCRIPTION

316-1 SWITCHES FLOW TO CARBON CANISTER ON AFTERBURNER LOW TEMPERATURE, LOW O , OR PREMIX BLOWER SHUTDOWN

316-2 PREMIX BLOWER START / STOP AND REMOTE JOG

316-5 VALVE CONTROL OVERRIDE FROM WDPF.

REVISIONS

NO	DESCRIPTION	DATE	BY	CHK	ENG MGR
1	HARD WIRED TO LEVEL	04-25-00	GVC		
2	ADDED VENT FROM DIRECT BURN TANKER	6-5-00	GVC		
3	ADDED TRUCK UNLOADING DIRECT BURN STA.	03-19-02	KL		
4	ADDED CORROSIVE WASTE VENT	12-5-07	KL		
5	Changed AIT3044 to AIT3044B (New Instrmnt)	01-28-14	LCC		

REVISIONS

NO	DESCRIPTION	DATE	BY	CHK	ENG MGR
6	AS BUILT UPDATE	05-27-93	DCP		
7	AS BUILT UPDATE	12-11-96	CRM		
8	AS BUILT	12-30-96	CRM		
9	CORRECT DRAFTING ERRORS & AS BUILT F.M.	04-21-98	CRM		
10	CHANGED SAMPLING LINE TO SHOW AS BUILT	10-01-98	CRM		

APPROVALS

	BY	DATE
DRAWN	GRM	04-21-98
CHECKED		
ELEC		
MECH		
STRUCT		
PROJECT ENG		
ENGINEERING MGR		
AS BUILT		

REGISTERED PROFESSIONAL ENGINEER
DATE:

CleanHarbors
APARCHITE LLC

TITLE
UTAH ENVIRONMENTAL SERVICE CENTER
INCINERATION PLANT FOR INDUSTRIAL WASTES
P&ID HYDROCARBON VENT SYSTEM

FOR TOOELE SITE
CAD NO. AP3410
SCALE
JOB NO PI-316
SAFETY-KLEEN DWG NO D-800-PI-316
REV 15