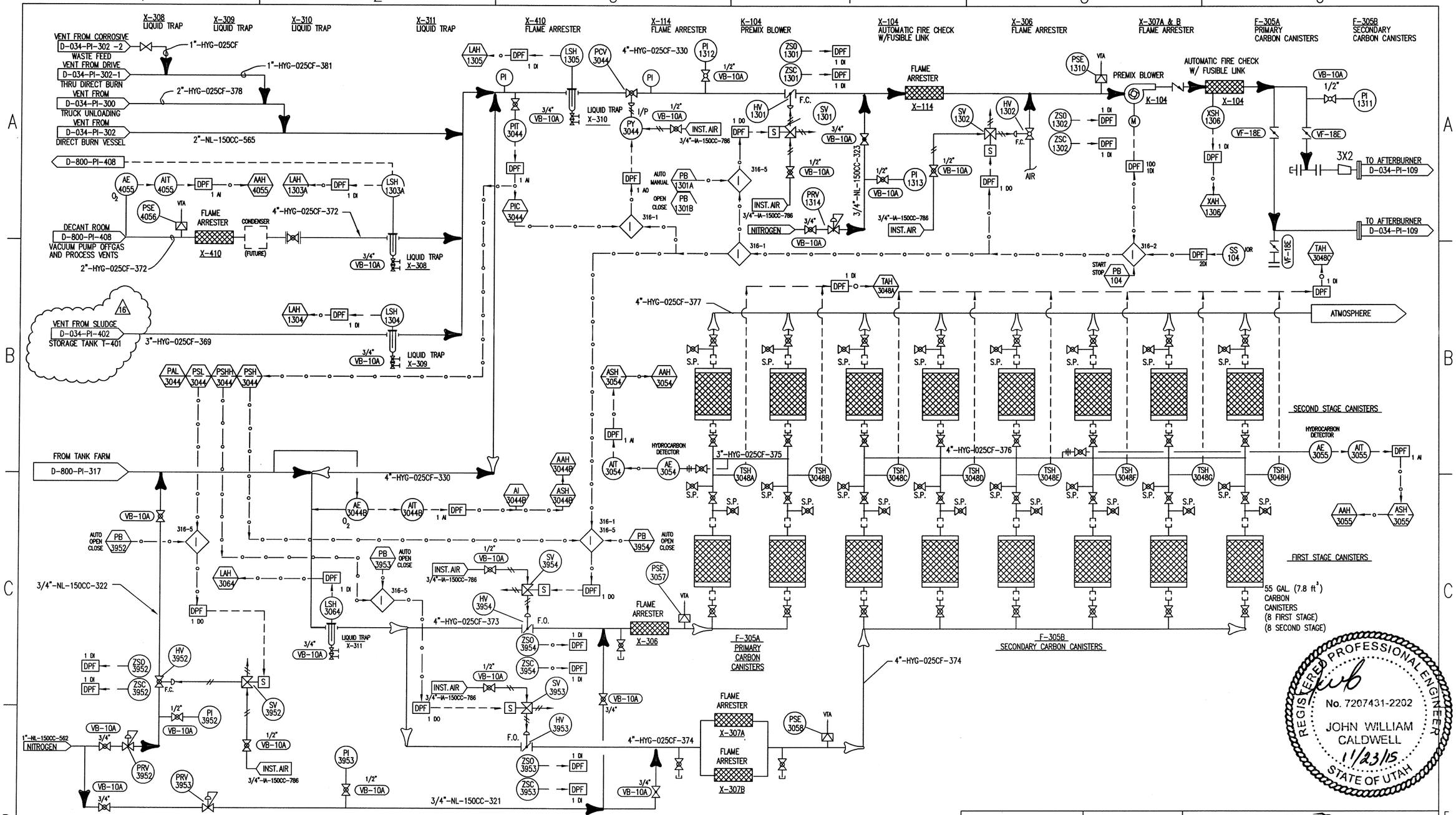

INTERLOCK DESCRIPTION

316-1 SWITCHES FLOW TO CARBON CANISTER ON AFTERBURNER LOW TEMPERATURE, LOW O , OR PREMIX BLOWER SHUTDOWN

316-2 PREMIX BLOWER START / STOP AND REMOTE JOG

316-5 VALVE CONTROL OVERRIDE FROM WDPF.

REVISIONS

NO	DESCRIPTION	DATE	BY	CHK		ENG MGR
1	HARD WIRED TO LEVEL	04-25-00	GVC			
2	ADDED VENT FROM DIRECT BURN TANKER	6-5-00	GVC			
3	ADDED TRUCK UNLOADING DIRECT BURN STA.	03-19-02	KL			
4	ADDED CORROSIVE WASTE VENT	12-5-07	KL			
5	CHANGED AIT3044 TO AIT3044B (NEW INSTRUMENT)	01-28-14	LCC			

REVISIONS

NO	DESCRIPTION	DATE	BY	CHK		ENG MGR
6	CORRECTED DRAWING REFERENCE	11-10-15	MM	LB		
7	AS BUILT UPDATE	12-11-96	CRM			
8	AS BUILT	12-30-96	CRM			
9	CORRECT DRAFTING ERRORS & AS BUILT F.M.	04-21-98	CRM			
10	CHANGED SAMPLING LINE TO SHOW AS BUILT	10-01-98	CRM			

APPROVALS

	BY	DATE
DRAWN	CRM	04-21-98
CHECKED		
ELEC		
MECH		
STRUCT		
PROJECT ENG		
ENGINEERING MGR		
AS BUILT		

REGISTERED PROFESSIONAL ENGINEER
DATE:_____

CleanHarbors
ARAGONITE LLC

TITLE
UTAH ENVIRONMENTAL SERVICE CENTER
INCINERATION PLANT FOR INDUSTRIAL WASTES
P&ID HYDROCARBON VENT SYSTEM

FOR TOOELE SITE | CAD NO. AP341
SCALE | JOB NO PI-316 | SAFETY-KLEEN DWG NO D-800-PI-316 | REV 16