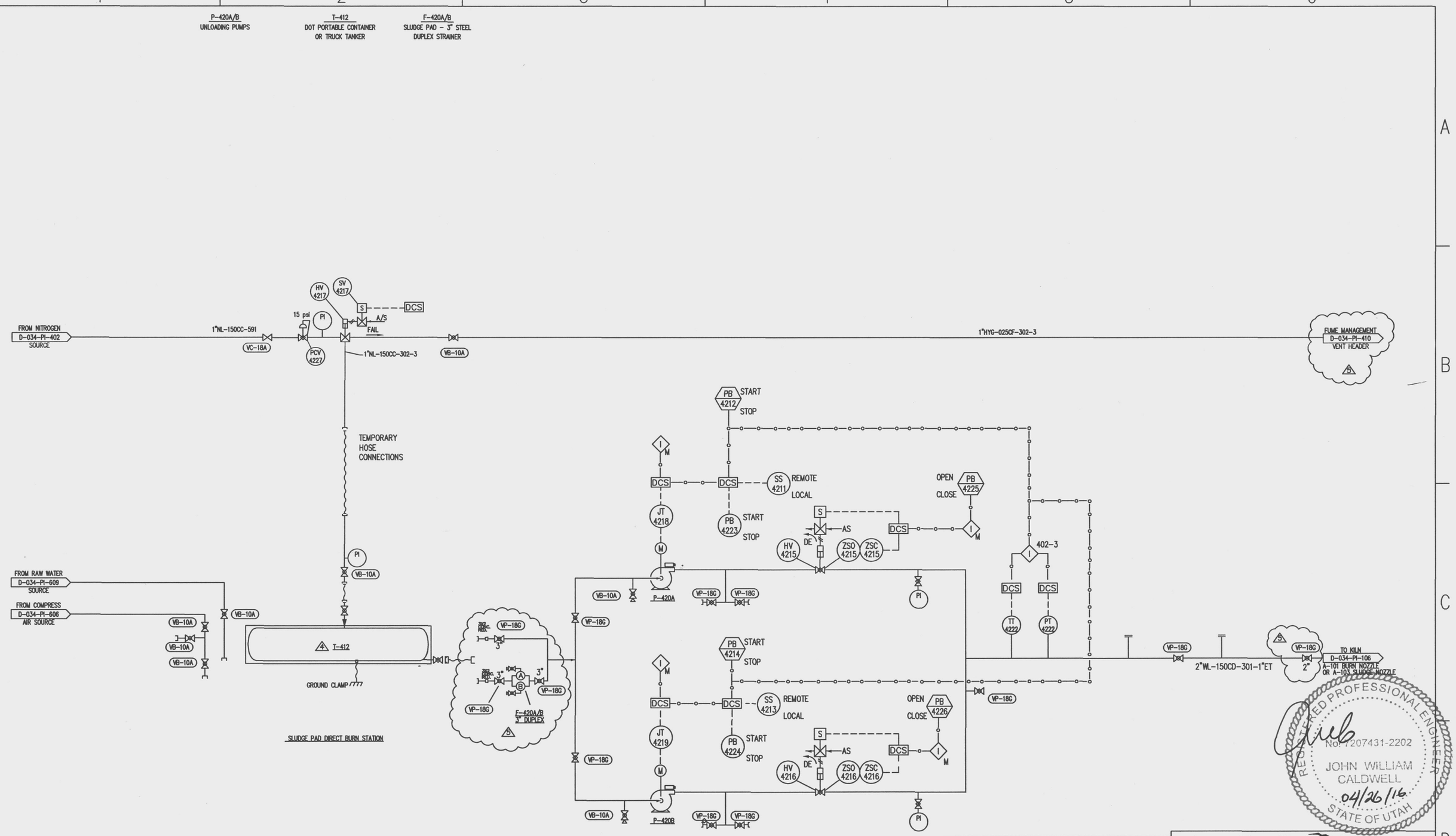

INTERLOCK DESCRIPTION

M - MASTER INTERLOCK SYSTEM
M302-3-1 - TEMPERATURE/PRESSURE INTERLOCK

REVISIONS

NO	DESCRIPTION	DATE	BY	CHK		ENG MGR
0	SUBMIT TO UT DEQ FOR TEMP AUTHORIZATION	6-06-2011	LCC			
1	AS BUILT	8-18-2011	LCC			
2	SUBMIT TO UTDEQ FOR TEMP AUTHORIZATION	10-1-2011	LCC			
	SHOW FEED TO AFTERBURNER FOR <350cps MATL					
3	CHANGE DRAWING TITLE, REMOVE ABC FEED REF.	1-31-2012	TJK			

REVISIONS

NO	DESCRIPTION	DATE	BY	CHK		ENG MGR
4	CORRECTED DWG FOR SLUDGE PAD DIRECT BURN					
	AND ADDED DUPLEX STRAINER BEFORE PUMPS.	11-17-15	MM	LB		
5	ADDED ISOLATION VALVES AND CLARIFIED SIZES	04-22-16	MM	LB		
	OF FILTER CONNECTIONS AND VENT LINE DWG REF					

APPROVALS

	BY	DATE
DRAWN	MM	12-17-2015
CHECKED	LB	
ELEC		
MECH		
STRUCT		
PROJECT ENG		
ENGINEERING MGR		
AS BUILT		

REGISTERED PROFESSIONAL ENGINEER
DATE:_____

CleanHarbors®
ARAGONITE LLC

TITLE
UTAH ENVIRONMENTAL SERVICE CENTER
INCINERATION PLANT FOR INDUSTRIAL WASTES
SLUDGE PAD DIRECT BURN STATION

FOR	TOOELE SITE	CAD NO.	PI302-3B	
SCALE	JOB NO	SAFETY-KLEEN DWG NO	D-034-PI-302-3	REV 5