Attachment VI-2

Appendix B

Closure Drawings: Cells 4 and 5

Appendix B

Closure Drawings

for

Cell 4

CleanHarbors®
ENVIRONMENTAL SERVICES, INC.

GRASSY MOUNTAIN FACILITY

LANDFILL CELL 4 CLOSURE

FACILITY LOCATION
KNOLLS, UTAH
Phone: (435) 884–8900

DECEMBER 2009

REGIONAL HEADQUARTERS
42 LONGWATER DRIVE
NORWELL, MA 02061
Phone: (781) 792–5000

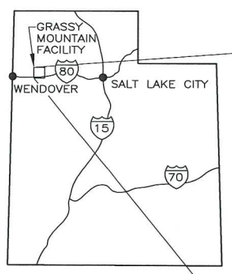

STATE OF UTAH

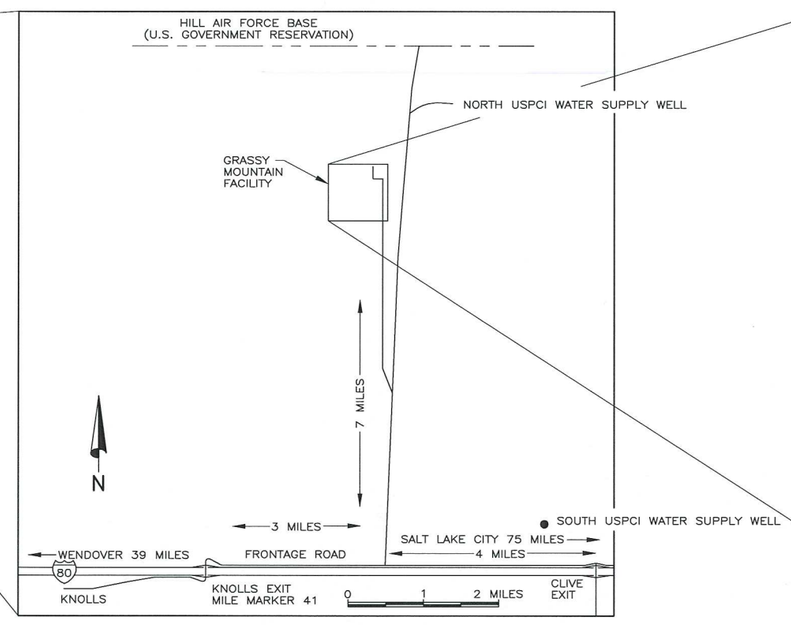

VICINITY MAP

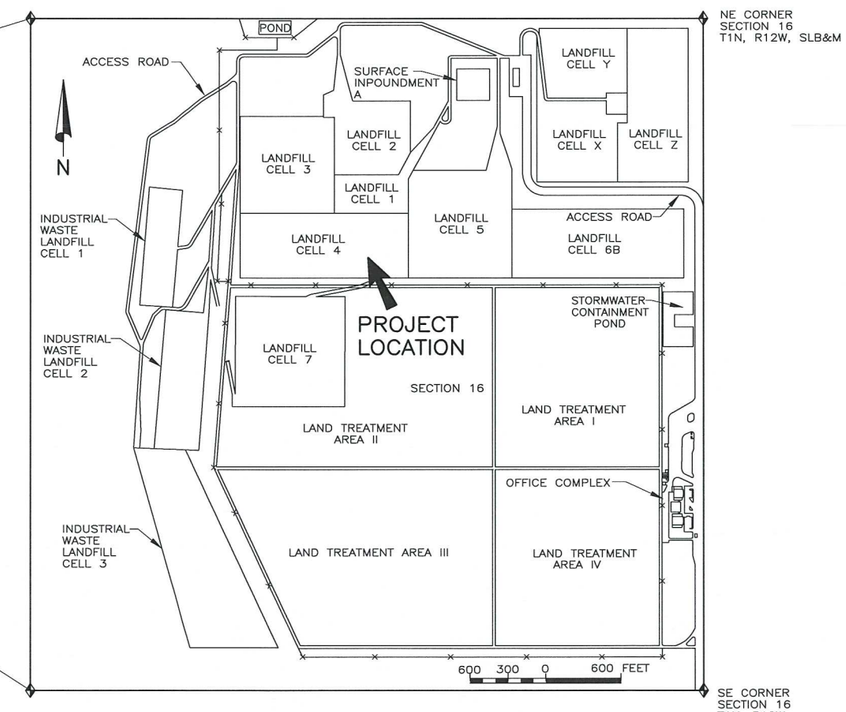

PROJECT LOCATION

PROFESSIONAL ENGINEER
12/9/09
NO. 151898
MARVIN E. ALLEN
STATE OF UTAH

HANSEN ALLEN & LUCE inc
ENGINEERS

CONSULTANTS
ENGINEERS
Salt Lake City
Utah

FILE NAME: 064 – CLEAN HARBORS\73.110 – CELLS 4 5 Z CLOSURES\CAD\CELL 4\CURRENT DESIGN\G4–1 CELL 4 COVER.DWG
FILE DATE: 12.7.2009 15:00:19 (OAH)

7/95

GENERAL NOTES

1. COORDINATES AND ELEVATIONS PROVIDED ARE BASED ON SITE SPECIFIC COORDINATE SYSTEM AND DATUM CONTROL.
2. OBTAIN AND COMPLY WITH ALL REQUIRED ENVIRONMENTAL PERMITS.
3. DEVELOP AND FOLLOW A HEALTH AND SAFETY PLAN FOR THE PROJECT.
4. CONTRACTOR(S) SHALL BE RESPONSIBLE FOR PROJECT AND SITE SAFETY, AND FOR COMPLIANCE WITH SAFETY LAWS AND REGULATIONS.
5. FIELD OFFICE(S), COMMUNICATION EQUIPMENT, AND POTABLE WATER, REQUIRED TO PERFORM WORK TO BE PROVIDED BY CONTRACTOR(S).
6. BORROW SOURCES SHALL BE DESIGNATED BY OWNER.
7. SANITARY FACILITIES TO BE PROVIDED BY FACILITY.
8. CONTRACTOR(S) SHALL PROTECT EXISTING MONITORING WELLS, PEIZOMETERS, LEACHATE WITHDRAWAL PIPES, AND STORM DRAINAGE FACILITIES DURING CONSTRUCTION ACTIVITIES. ANY DAMAGE TO MONITORING WELLS, PIEZOMETERS, LEACHATE WITHDRAWAL PIPES, AND STORM DRAINAGE FACILITIES RESULTING FROM CONTRACTOR ACTIVITIES OR ACTIVITIES BY ANY SUB-CONTRACTOR TO CONTRACTOR SHALL BE CORRECTED AT CONTRACTOR'S EXPENSE. CONTRACTOR SHALL BE FINANCIALLY RESPONSIBLE FOR ALL COSTS TO OWNER RESULTING FROM SUCH DAMAGE.
9. CONSTRUCTION SURVEY CONTROLS FOR THE SITE SHALL BE PROVIDED. EARTHWORK CONTRACTOR(S) SHALL BE RESPONSIBLE FOR ALL ADDITIONAL CONSTRUCTION SURVEY STAKING AND GRADE CONTROL AFTER BEING SUPPLIED WITH SURVEY CONTROLS. ALL CONTRACTOR SURVEY NOTES, GRADE CHECKS, ETC. SHALL BE PROVIDED TO OWNER.
10. OWNER MAY PROVIDE A SURVEY CHECK TO VERIFY CONSTRUCTION IN ACCORDANCE WITH DESIGN LINES AND GRADES. ANY AREAS FOUND NOT TO BE IN COMPLIANCE WITH DESIGN LINES AND GRADES AND ACCEPTABLE GRADING TOLERANCES SHALL BE CORRECTED AT CONTRACTOR EXPENSE. CONTRACTOR SHALL PAY OWNER FOR ANY SUBSEQUENT GRADE CHECKING REQUIRED BY OWNER'S SURVEYOR.
11. CLEARING AND GRUBBING MATERIALS SHALL BE STOCKPILED IN THE AREAS DESIGNATED BY OWNER.
12. NORTH WATER SUPPLY WELL IS LOCATED NORTH 700 FEET AND EAST 250 FEET FROM THE SW CORNER OF SECTION 2, TOWNSHIP 1 NORTH, RANGE 12 WEST, SLB&M. SOUTH WATER SUPPLY WELL IS LOCATED IN THE NE ¼ OF SECTION 13, TOWNSHIP 1 SOUTH, RANGE 12 WEST,SLB&M. CONTRACTOR IS RESPONSIBLE FOR CONVEYANCE OF WATER FROM WELLS TO THE PROJECT LOCATION. SEE COVER SHEET FOR APPROXIMATE LOCATION OF WELLS IN RELATION TO THE PROJECT SITE.

LINING SYSTEM SUBGRADES & SOIL FILL

1. ALL SURFACES PROVIDING SUBGRADES FOR LINING SYSTEMS SHALL BE PROOF ROLLED FOR SOFT AND/OR YIELDING SURFACES. SOFT AND/OR YIELDING SURFACES SHALL BE COMPACTED TO PROVIDE A FIRM SUBGRADE FOR LINING SYSTEMS.
2. COMPACTED CLAY LINER MATERIALS SHALL BE OBTAINED FROM CLAY SOILS IN THE MUD FLAT AREAS WEST OF THE FACILITY. CLAY LINER MATERIALS SHALL BE MIXED THOROUGHLY WITH A DEFLOCCULATING AGENT (SODIUM TRIPOLYPHOSPHATE) AT THE RATE OF 3.5 POUNDS PER 50 CUBIC FEET OF LOOSE MATERIAL PRIOR TO PLACEMENT. ALL CLAY LINER MATERIALS SHALL BE COMPACTED TO 95% OF ASTM D-698 AT A MOISTURE CONTENT BETWEEN MINUS 2% AND PLUS 4% OF OPTIMUM. ALL CLAY LINER SHALL MEET THE REQUIRED PERMEABILITY OF 1 X 10-7 CM/SEC. CLAY LINER SURFACES SHALL BE MAINTAINED UNTIL PLACEMENT OF OVERLYING GEOSYNTHETIC MATERIALS.
3. ALL FILL MATERIALS REQUIRING COMPACTION, ON THE PERIMETER SIDESLOPES, PIPE BACKFILL, AND OTHER DESIGNATED COMPACTION AREAS SHALL BE COMPACTED TO 95% OF ASTM D-698 AT A MOISTURE REQUIRED TO FACILITATE COMPACTION.
4. CONTRACTOR SHALL BE RESPONSIBLE TO PROVIDE A PROPER AND APPROVED SUB-GRADE FOR THE GEOSYNTHETICS MATERIALS.
5. THE SUB-GRADE FOR THE GEOSYNTHETIC MATERIALS SHALL BE FREE OF PROTRUDING ROCKS AND DEBRIS THAT MAY POTENTIALLY CAUSE DAMAGE TO THE GEOSYNTHETIC MATERIALS. THE SUBGRADE SHALL ALSO BE ROLLED WITH A SMOOTH DRUM ROLLER TO LEAVE THE SURFACE SMOOTH AND FREE FROM ABRUPT CHANGES IN GRADE.
6. CONTRACTOR SHALL COORDINATE EXCAVATION AND BACKFILLING OF THE GEOSYNTHETICS ANCHOR TRENCH WITH THE GEOSYNTHETICS INSTALLER. THE BOTTOM OF THE TRENCH SHALL BE LIFT FIRM TO ALLOW FOR PLACEMENT AND COMPACTION OF BACKFILL MATERIALS ABOVE THE GEOSYNTHETICS. ALL BACKFILL SHALL BE COMPACTED TO 95% OF ASTM D-698.
7. BORROW SOURCES FOR 6-INCH THICK IMPORTED SAND AND 2-FOOT THICK IMPORTED SOIL COVER LAYERS TO BE PRE-APPROVED BASED ON THE FOLLOWING TESTS USING LIQUID OBTAINED FROM SYNTHETIC LEACHATE PRODUCED USING BORROW SOURCE SOILS: 1. SCREENING CLAY PORTION OF GEOSYNTHETIC CLAY LINER FOR CHEMICAL COMPATIBILITY TO LIQUIDS (ASTM D6141); 2. SWELL INDEX (ASTM D5890); 3. FLUID LOSS TESTING (ASTM D5891); AND 4.HYDRAULIC CONDUCTIVITY (ASTM D6766 OR ASTM D5084) AS REQUIRED BY THE ENGINEER BASED ON RESULTS OF OTHER TESTING. MAXIMUM HYDRAULIC CONDUCTIVITY OF GCL SHALL MEET AN EQUIVALENCY OF A 2-FOOT THICK COMPACTED CLAY LINER WITH A HYDRAULIC CONDUCTIVITY OF 1X10-7 CM/SEC.

GENERAL GEOSYNTHETICS

1. MANUFACTURER'S CERTIFICATIONS SHALL BE PROVIDED FOR ALL RAW AND MANUFACTURED MATERIALS AT THE TIME OF SHIPMENT. CERTIFICATIONS SHALL BE IN ACCORDANCE WITH THE MANUFACTURER'S MATERIAL SPECIFICATIONS AND PROJECT CQA PLAN CRITERIA AND SHALL INCLUDE ALL TEST DATA FOR MATERIALS DELIVERED AND AT A MINIMUM, THE TEST FREQUENCIES DESIGNATED IN THE MANUFACTURER'S QUALITY ASSURANCE MANUALS AND SPECIFICATIONS AND THE PROJECT CQA PLAN.
2. GEOSYNTHETIC INSTALLERS ARE REQUIRED TO OBTAIN AND BECOME FAMILIAR WITH ALL MANUFACTURER'S HANDLING AND INSTALLATION SPECIFICATIONS FOR ALL GEOSYNTHETIC MATERIALS PRIOR TO BEGINNING INSTALLATION.

GENERAL GEOSYNTHETICS (CONT.)

3. ALL GEOSYNTHETIC MATERIALS SHALL BE LOADED, TRANSPORTED, OFF-LOADED, STORED, AND HANDLED IN ACCORDANCE WITH MANUFACTURER RECOMMENDATIONS. AREAS FOR STORING OF GEOSYNTHETIC MATERIALS SHALL BE GRADED TO PROVIDE DRAINAGE AWAY FROM THE STORED MATERIALS. ROLLS OF GCL SHALL BE STORED IN SUCH A WAY TO BE SUPPORTED ABOVE THE GROUND SURFACE AND SHALL BE HANDLED TO AVOID DAMAGE TO THE PROTECTIVE COVERING TO MINIMIZE THE POTENTIAL OF PRE-MATURE HYDRATION.
4. AT A MINIMUM, ALL GEOSYNTHETIC MATERIALS SHALL BE INSTALLED IN ACCORDANCE WITH MANUFACTURER'S RECOMMENDATIONS AND INSTALLATION GUIDES AND IN ACCORDANCE WITH THE PROJECT SPECIFICATIONS AND CQA PLAN.
5. THE GEOSYNTHETIC INSTALLER SHALL PROVIDE A SUBGRADE ACCEPTANCE CERTIFICATION FOR ALL AREAS OF GCL DEPLOYMENT. THE CERTIFICATION SHALL INDICATE ALL GEOMEMBRANE PANEL NUMBERS BELOW WHICH THE SOIL SUBGRADE HAS BEEN ACCEPTED.
6. ONLY LOW GROUND PRESSURE VEHICLES SUCH AS SOFT TIRE ATV'S AND SIMILAR VEHICLES SHALL BE ALLOWED TO OPERATE ON THE GEOSYNTHETIC MATERIALS TO ASSIST IN DEPLOYMENT. CARE SHALL BE EXERCISED TO AVOID ANY ACTIVITY THAT MAY CAUSE DAMAGE TO GEOSYNTHETIC MATERIALS WHILE USING THE LOW GROUND PRESSURE VEHICLES.
7. PANELS OF GEOSYNTHETIC MATERIALS SHALL BE PLACED SUCH THAT, AS MUCH AS POSSIBLE, SEAMS ARE PARALLEL TO THE DIRECTION OF THE SLOPE.
8. PANELS OF GCL SHALL BE PLACED TO LIE FLAT ABOVE THE PREPARED SOIL SUBGRADE WITH NO WRINKLES. SUBSEQUENT GEOSYNTHETIC MATERIALS SHALL BE PLACED AS MUCH AS PRACTICAL TO LIE FLAT ABOVE PREVIOUS COURSES OF GEOSYNTHETIC MATERIALS.
9. ALL GEOSYNTHETIC SEAMS SHALL BE OVERLAPPED WITH THE UP-GRADIENT PANEL OVERLAPPING THE DOWN-GRADIENT PANEL IN A SHINGLE TYPE CONFIGURATION.
10. ALL GEOSYNTHETIC MATERIALS DAMAGED DURING LOADING, OFF-LOADING, TRANSPORT, STORAGE, INSTALLATION, ETC. SHALL BE REMOVED AND REPLACED OR REPAIRED IN ACCORDANCE WITH MANUFACTURER'S RECOMMENDATIONS. MINIMUM OVERLAPS FOR PATCHES OVER DAMAGED GEOSYNTHETIC MATERIALS SHALL BE 12 INCHES IN ALL DIRECTIONS FROM THE DAMAGED AREAS.

GEOSYNTHETIC CLAY LINER

1. GCL MATERIALS SHALL BE NEEDLE PUNCH REINFORCED.
2. ALL DEPLOYED GCL MATERIALS SHALL BE COVERED BY THE END OF EACH WORK DAY TO MINIMIZE EVAPORATION OF MOISTURE WITHIN THE BENTONITE AND TO PROTECT THE GCL MATERIALS FROM EXPOSURE TO RAINY AND SNOWY WEATHER.
3. SEAMING SHALL BE IN ACCORDANCE WITH MANUFACTURER'S RECOMMENDATIONS, THE PROJECT SPECIFICATIONS, AND THE PROJECT CQA PLAN.
4. GCL MATERIALS THAT ARE MANUFACTURED TO PROVIDE SELF-SEALING SEAMS AND DO NOT REQUIRE A BENTONITE BEAD SHALL RECEIVE A BENTONITE BEAD ONLY WHEN THE SELF-SEALING DESIGN IS COMPROMISED ON THE ENDS OF PANELS AND WHERE THE SELF-SEALING GROOVE (IF PART OF THE SELF-SEALING DESIGN) HAS BEEN REMOVED FROM PARTIAL WIDTH ROLLS.
5. GCL MATERIALS THAT HAVE NOT BEEN MANUFACTURED TO PROVIDE SELF SEALING SEAMS SHALL RECEIVE A BENTONITE BEAD TO PROVIDE THE SEAM SEAL IN ACCORDANCE WITH MANUFACTURER'S RECOMMENDATIONS.
6. BENTONITE BEADS SHALL BE PLACED APPROXIMATELY AT THE CENTER OF THE OVERLAP FOR SEAMS.
7. LONGITUDINAL SEAMS SHALL RECEIVE A MINIMUM OVERLAP OF 9 INCHES OR GREATER IF REQUIRED BY MANUFACTURER'S SPECIFICATIONS.
8. END-OF-PANEL SEAMS SHALL RECEIVE A MINIMUM OVERLAP OF 24 INCHES OR GREATER IF REQUIRED BY MANUFACTURER'S SPECIFICATIONS.

GEOMEMBRANE LINER

1. NO SMOKING WILL BE ALLOWED BY ANY ENTITY ON THE GEOSYNTHETIC MATERIALS.
2. GEOMEMBRANE MATERIALS PLACED ON THE 2H:1V PERIMETER SLOPES SHALL BE TEXTURED ON BOTH SIDES.
3. GEOMEMBRANE MATERIALS PLACED ON THE TOP 5% SLOPES MAY BE SMOOTH OR TEXTURED AS DIRECTED BY THE OWNER.
4. NO GEOMEMBRANE MATERIALS SHALL BE DEPLOYED IN SUB-FREEZING TEMPERATURES UNLESS APPROVED BY OWNER WITH AN APPROVED COLD WEATHER DEPLOYMENT PLAN.
5. GEOSYNTHETICS INSTALLER SHALL INSTALL SUFFICIENT SAND BAGS TO HOLD THE GEOMEMBRANE IN PLACE UNDER REASONABLY EXPECTED WIND CONDITIONS.
6. WRINKLES CAUSED BY PANEL PLACEMENT OR THERMAL EXPANSION SHALL BE MINIMIZED.
7. INSTALLER SHALL PROVIDE AN APPROVED PANEL PLACEMENT PLAN PRIOR TO DEPLOYMENT. ANY CHANGES TO THE PANEL PLACEMENT PLAN SHALL BE APPROVED BY OWNER AND SHALL BE PROVIDED BY INSTALLER IN AS-BUILD DRAWINGS.
8. PANELS SHALL BE OVERLAPPED SUFFICIENTLY TO AFFECT A GOOD WELD AND GOOD SEAMING. IN NO CASE SHALL OVERLAPS BE LESS THAN 3 INCHES.
9. NO SEAMING SHALL BE ALLOWED IN SUB-FREEZING TEMPERATURES WITHOUT OWNER APPROVAL OF AN APPROPRIATE COLD WEATHER SEAMING PLAN AND ONLY AFTER PROPER DEMONSTRATION OF PRE-QUALIFIED TEST SEAMS.
10. SEAMING SHALL PRIMARILY BE WITH FUSION WELDING EQUIPMENT AND TECHNIQUES. EXTRUSION WELDING SHALL BE USED WHEN FUSION WELDING IS NOT POSSIBLE (PIPE PENETRATIONS, PATCHES, REPAIRS, SHORT SEAMS, ETC.).
11. FISHMOUTHS OR EXCESSIVE WRINKLES AT SEAM OVERLAPS SHALL BE MINIMIZED AND REMOVED WHEN NECESSARY.

GEOMEMBRANE LINER (CONT.)

12. ALL ON-SITE TESTING AND QUALITY CONTROL SHALL BE PERFORMED AND DOCUMENTED BY INSTALLER. ON-SITE TESTING SHALL INCLUDE DESTRUCTIVE TESTING FOR TEST SEAMS AND FOR PRODUCTION SEAMS, NON-DESTRUCTIVE AIR PRESSURE TESTING FOR 100% OF FUSION WELDED SEAMS (INCLUDING REPAIRS), AND VACUUM TESTING FOR 100% OF EXTRUSION WELDED SEAMS (INCLUDING REPAIRS).
13. FIELD TESTING AND QUALITY CONTROL SHALL FOLLOW, AT A MINIMUM, THE REQUIREMENTS PROVIDED IN SECTION 3.05 OF THE 2007 REVISION OF THE INTERNATIONAL ASSOCIATION OF GEOSYNTHETIC INSTALLERS HDPE AND LLDPE GEOMEMBRANE INSTALLATION SPECIFICATION, THE MANUFACTURERRS INSTALLATION PROCEDURES, AND/OR THE PROJECT SPECIFICATIONS AND CQA PLAN, WHICHEVER IS MOST STRINGENT.
14. ALL QUALITY CONTROL DOCUMENTATION SHALL BE PROVIDED TO QUALITY ASSURANCE PERSONNEL ON A DAILY BASIS.

GEONET AND DRAINAGE COMPOSITE

1. GEOMEMBRANE MATERIALS SHALL BE CLEANED OF DIRT AND DEBRIS PRIOR TO DEPLOYMENT OF GEONET AND DRAINAGE COMPOSITS.
2. GEONETS SHALL BE MAINTAINED CLEAN OF DIRT AND DEBRIS UNTIL PLACEMENT OF OVERLYING NON-WOVEN GEOTEXTILE FILTER FABRIC.
3. OVERLAPS SHALL BE, AT A MINIMUM, THE DIMENSIONS RECOMMENDED BY THE MANUFACTURES, PROJECT SPECIFICATIONS, AND PROJECT CQA PLAN.
4. GEONET SEAMS SHALL BE SECURED OR FASTENED USING WIRE TIES AT A MINIMUM SPACING OF 5 FEET ALONG LONGITUDINAL SEAMS AND A MINIMUM OF 2 FEET ALONG END SEAMS.
5. DRAINAGE COMPOSITE SHALL BE FASTENED OR SECURED WITH HEAT BONDING, OR OTHER APPROVED METHOD, BETWEEN GEOTEXTILE FABRIC MATERIALS ALONG THE ENTIRE LENGTH OF THE SEAMS.
6. SINGLE-SIDED GEOCOMPOSITE MAY BE USED IN-LIEU OF DRAINAGE NET AND GEOTEXTILE PROVIDED IT MEETS PROJECT SPECIFICATIONS.

NON-WOVEN GEOTEXTILE

1. NON-WOVEN GEOTEXTILE SHALL BE AT LEAST 8 OZ. OR MORE.
2. OVERLAPS OF SEAMS SHALL BE, AT A MINIMUM, THE DIMENSIONS RECOMMENDED BY THE MANUFACTURES. SEAMS SHALL BE SECURED BY CONTINUOUS HEAT BONDING OR SEWING ALONG THE ENTIRE LENGTH OF THE SEAMS.

PROTECTIVE SOIL COVER

1. CONTRACTOR SHALL EXERCISE CARE DURING PLACEMENT OF PROTECTIVE SOIL COVER MATERIALS. A MINIMUM COVER THICKNESS AS DESIGNATED IN THE PROJECT SPECIFICATIONS AND/OR THE PROJECT CQA PLAN SHALL BE MAINTAINED AT ALL TIMES BETWEEN THE TIRES OR TRACKS OF EQUIPMENT AND THE UNDERLYING GEOSYNTHETIC MATERIALS.
2. NO SHARP, ABRUPT, OR PIVOTING TURNS SHALL BE ALLOWED BY EQUIPMENT USED ABOVE THE PROTECTIVE SOIL COVER THAT MAY CAUSE SOIL DISPLACEMENT AND DAMAGE TO UNDERLYING GEOSYNTHETIC MATERIALS.
3. AS NEEDED, CONTRACTOR SHALL USE AN EXCAVATOR OR OTHER SUITABLE EQUIPMENT TO PLACE PROTECTIVE SOIL COVER MATERIAL ON THE GEOSYNTHETIC MATERIALS OUT IN FRONT OF THE LEADING EDGE OF THE PROTECTIVE SOIL COVER. THIS WILL PROVIDE WEIGHT TO HOLD THE GEOSYNTHETIC MATERIALS IN PLACE AND REDUCE THE POTENTIAL OF CREATING LARGE WRINKLES AND WAVES IN THE GEOSYNTHETIC MATERIALS.
4. ANY WAVES OR WRINKLES THAT BEGIN TO FORM SHALL BE TRAPPED BY PLACING SUFFICIENT PROTECTIVE SOIL COVER BEYOND THE WAVES OR WRINKLES TO HOLD THEM IN PLACE AND KEEP THEM FROM COMBINING INTO LARGER WAVES OR WRINKLES.

GRAVEL ARMOR PLATING (STONE MULCH)

1. GRAVEL ARMOR PLATING (OR STONE MULCH) MAY BE OBTAINED FROM THE GRAVEL PIT LOCATED EAST OF THE FACILITY AT THE BASE OF THE GRAY BACK MOUNTAINS (IF A MINING PERMIT IS OBTAINED FROM THE BLM BY OWNER).
2. STONE MULCH SHALL BE PLACED TO A MINIMUM THICKNESS OF 4 INCHES ON ALL CLOSURE SURFACES.
3. MINIMUM D50 SIZE FOR STONE MULCH SHALL BE 0.9 INCH AND SHALL BE VERIFIED BY TESTING.

STORM DRAINAGE SYSTEM

1. ALL MANHOLES, LIDS, AND RINGS AND COVERS SHALL BE RATED FOR H20 LOADINGS.
2. RINGS AND COVERS SHALL PROVIDE A MINIMUM OPENING FOR ACCESS OF 30 INCHES.
3. CAST-IN-PLACE CONCRETE SHALL HAVE A MINIMUM STRENGTH OF 4,000 PSI.
4. CONTRACTOR TO OBTAIN SURFACE ELEVATIONS AT ALL MANHOLES TO DETERMINE MANHOLE DEPTHS PRIOR TO FABRICATION. CONTRACTOR IS RESPONSIBLE TO DETERMINE ALL MANHOLE DEPTHS.
5. RIPRAP APRON AT CONCRETE BAFFLED OUTLETS TO EXTEND A MINIMUM DISTANCE OF 5 FEET, TO BE 12 INCHES THICK, AND HAVE A D_{50}=3".
6. TYPE L RIPRAP AND TYPE II FILTER TO EXTEND AT A RADIUS OF 14 FEET MINIMUM FROM THE DOWNSPOUT PIPE OUTLET AND TO CONSIST OF THE FOLLOWING GRADATIONS:

	% SMALLER BY WEIGHT	INTERMEDIATE ROCK DIMENSION (INCHES)	MEAN ROCK DIAMETER D_{50} (INCHES)
TYPE L RIPRAP	70-100	14	
	50-70	12	
	35-50	9	9
	2-10	3	

	U.S. STANDARD SIEVE SIZE	PERCENT PASSING BY WEIGHT
TYPE II GRANULAR FILTER	3-INCH	90-100
	3/4 INCH	35-90
	NO. 4	8-30
	NO. 16	0-10
	NO. 200	0-3

INDEX OF DRAWINGS

GENERAL

G4-1 COVER SHEET
G4-2 INDEX SHEET

CIVIL-CELL 4 CLOSURE

C4-1 WASTE GRADE PLAN
C4-2 LINER SURFACE PLAN
C4-3 FINAL CLOSURE PLAN
C4-4 TYPICAL HIGH-LOW SECTIONS
C4-5 DOWNSPOUT SECTIONS
C4-6 DOWNSPOUT SECTIONS
C4-7 MISCELLANEOUS DETAILS
C4-8 BAFFLED OUTLET BOX

SECTION & DETAIL IDENTIFICATION

SECTION IDENTIFICATION

SECTION CUT ON DRAWING NO. 6 AND SHOWN ON DRAWING NO. 8
ON DRAWING NO. 6 THIS SECTION IS REFERENCED AS:

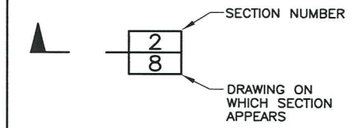

ON DRAWING NO. 8, THIS SECTION IS IDENTIFIED AS:

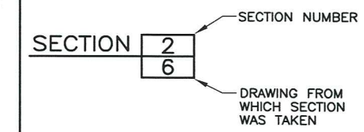

DETAIL IDENTIFICATION

DETAIL CALL-OUT ON DRAWING NO. 6 AND SHOWN ON DRAWING NO. 8
ON DRAWING NO. 6 THIS DETAIL IS REFERENCED AS:

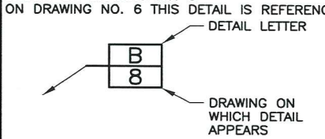

ON DRAWING NO. 8, THIS DETAIL IS IDENTIFIED AS:

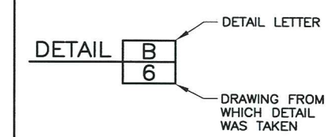

NOTES:

1. IF SECTION AND DETAILS ARE SHOWN ON THE SAME DRAWING AS SECTION CUTS AND SECTION OR DETAIL CALL-OUTS DRAWING NUMBER IS REPLACED BY A LINE.
2. DETAIL LETTERS "I" AND "O" NOT USED.

TABLE OF ABBREVIATIONS

●	=	AIR GAS VENT	MH	=	MANHOLE
@	=	AT	MIN.	=	MINIMUM
AVG.	=	AVERAGE	N.	=	NORTH
C.C.	=	CENTER TO CENTER	N.T.S.	=	NOT TO SCALE
℄	=	CENTER LINE	O.C.	=	ON CENTER
CLR.	=	CLEARANCE	PC	=	POINT OF CURVE
CONT.	=	CONTINUOUS	PI	=	POINT OF INTERSECTION
CPP	=	CORRUGATED POLYETHYLENE PIPE	PSI	=	POUND PER SQUARE INCH
DIA.	=	DIAMETER	PT	=	POINT OF TANGENT
DWG	=	DRAWING	REINF	=	REINFORCEMENT
E.	=	EAST	SDR	=	STANDARD DIMENSIONAL RATIO
EF	=	EACH FACE	SF	=	SQUARE FEET
EL.	=	ELEVATION	SQ.	=	SQUARE
E.W.	=	EACH WAY	STA.	=	STATION
FL	=	FLOW LINE	TL	=	TOP OF LINER
HDPE	=	HIGH DENSITY POLYETHYLENE	T.O.C.	=	TOP OF CONCRETE
ID	=	INSIDE DIAMETER	TYP.	=	TYPICAL
MAX.	=	MAXIMUM	UBC	=	UNTREATED BASE COURSE

FILE NAME: 064 - CLEAN HARBORS\73.110 - CELLS 4 5 Z CLOSURES\CAD\CELL 4\CURRENT DESIGN\G4-2 CELL 4 INDEX_SHEET.DWG
FILE DATE: 12.7.2009 15:05:12 (CAH)

PROFESSIONAL ENGINEER NO. 151898 MARVIN E. ALLEN 12/4/09

HANSEN ALLEN & LUCE ENGINEERS

PROJECT ENGINEER	DESIGNED KCS	3			
	DRAFTED CAH	2			
	CHECKED MEA	1			
	DATE DECEMBER 2009	NO.	DATE	REVISIONS	BY / APVD.

SCALE: NOT TO SCALE

CleanHarbors® ENVIRONMENTAL SERVICES, INC.

GRASSY MOUNTAIN FACILITY
LANDFILL CELL 4 - CLOSURE
INDEX SHEET

SHEET G4-2
64.73.110

10/07

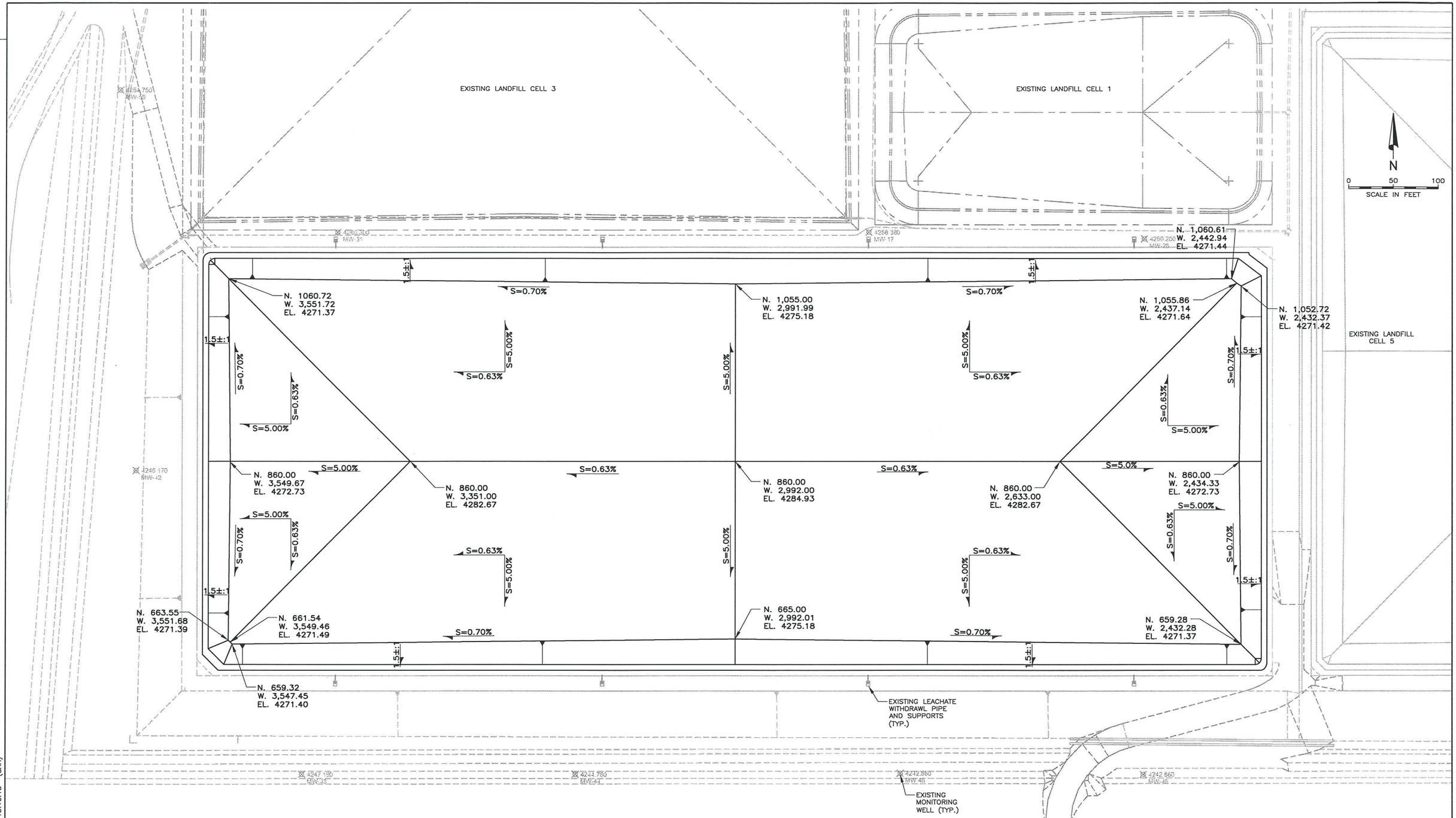

FILE NAME: 064 – CLEAN HARBORS\73.110 – CELLS 4 5 Z CLOSURES\CAD\CELL 4\CURRENT DESIGN\C4-1 CELL 4 CLOSURE _ WASTE GRADE PLAN.DWG
FILE DATE: 12.7.2009 15:10:18 (CAH)

10/07 10

HANSEN ALLEN & LUCE INC. ENGINEERS

PROFESSIONAL ENGINEER 12/9/09 NO. 151898 MARVIN E. ALLEN STATE OF UTAH

PROJECT ENGINEER

DESIGNED KCS	3					
DRAFTED CAH	2					
CHECKED MEA	1					
DATE DECEMBER 2009	NO.	DATE	REVISIONS	BY	APVD.	

SCALE

CleanHarbors® ENVIRONMENTAL SERVICES, INC.

GRASSY MOUNTAIN FACILITY
LANDFILL CELL 4 – CLOSURE
WASTE GRADE PLAN

SHEET C4–1

64.73.110

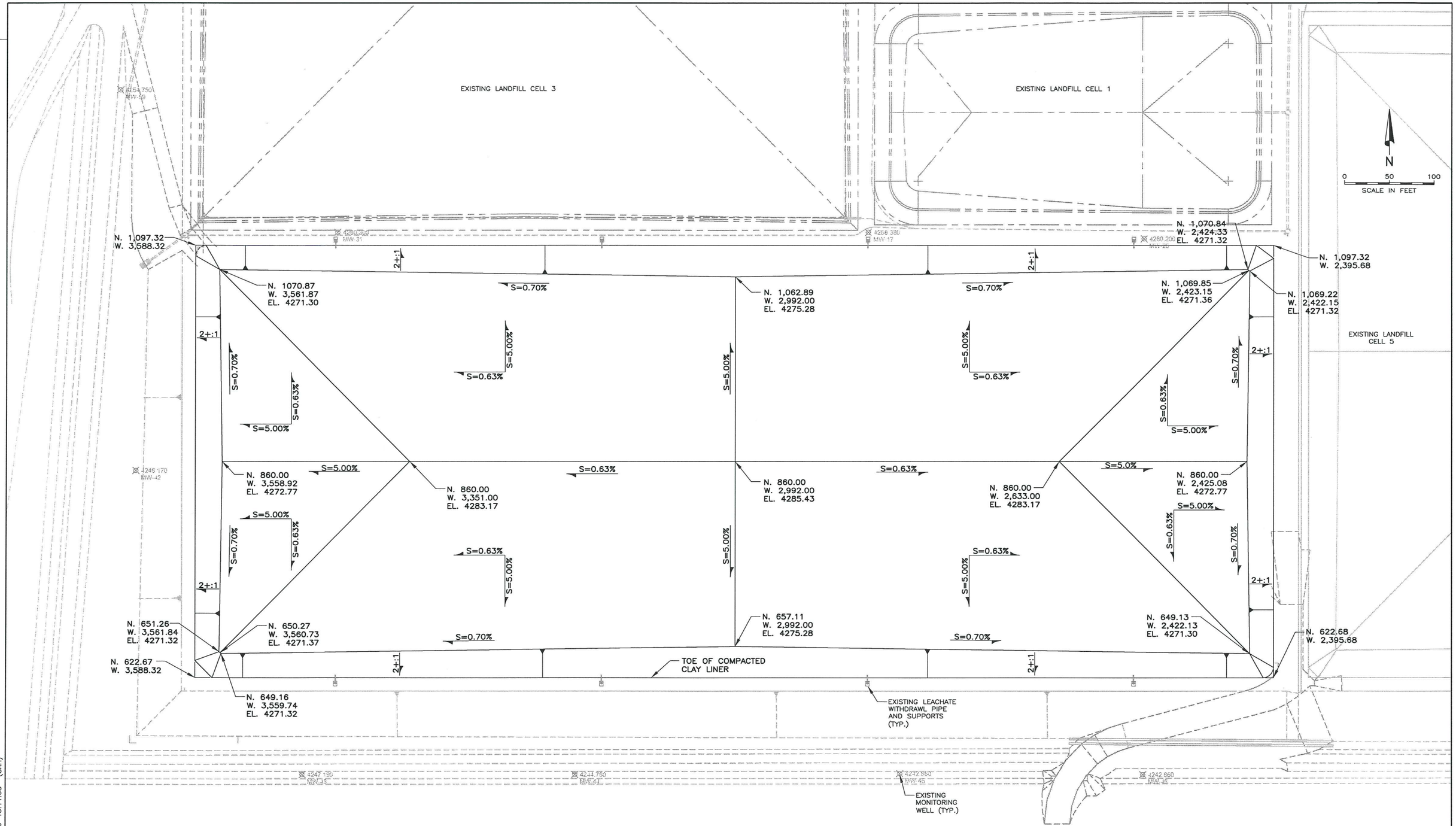

FILE NAME: 064 – CLEAN HARBORS\73.110 – CELLS 4 5 Z CLOSURES\CAD\CELL 4\CURRENT DESIGN\C4-2 CELL 4 CLOSURE – LINER SURFACE PLAN.DWG
FILE DATE: 12.7.2009 15:11:05 (CAH)

PROFESSIONAL ENGINEER 12/9/09 NO. 151898 MARVIN E. ALLEN STATE OF UTAH

HANSEN ALLEN & LUCE ENGINEERS

PROJECT ENGINEER

DESIGNED KCS	3					
DRAFTED CAH	2					
CHECKED MEA	1					
DATE DECEMBER 2009	NO.	DATE	REVISIONS	BY	APVD.	

SCALE

CleanHarbors® ENVIRONMENTAL SERVICES, INC.

GRASSY MOUNTAIN FACILITY
LANDFILL CELL 4 – CLOSURE
LINER SURFACE PLAN

SHEET C4–2

64.73.110

10/07

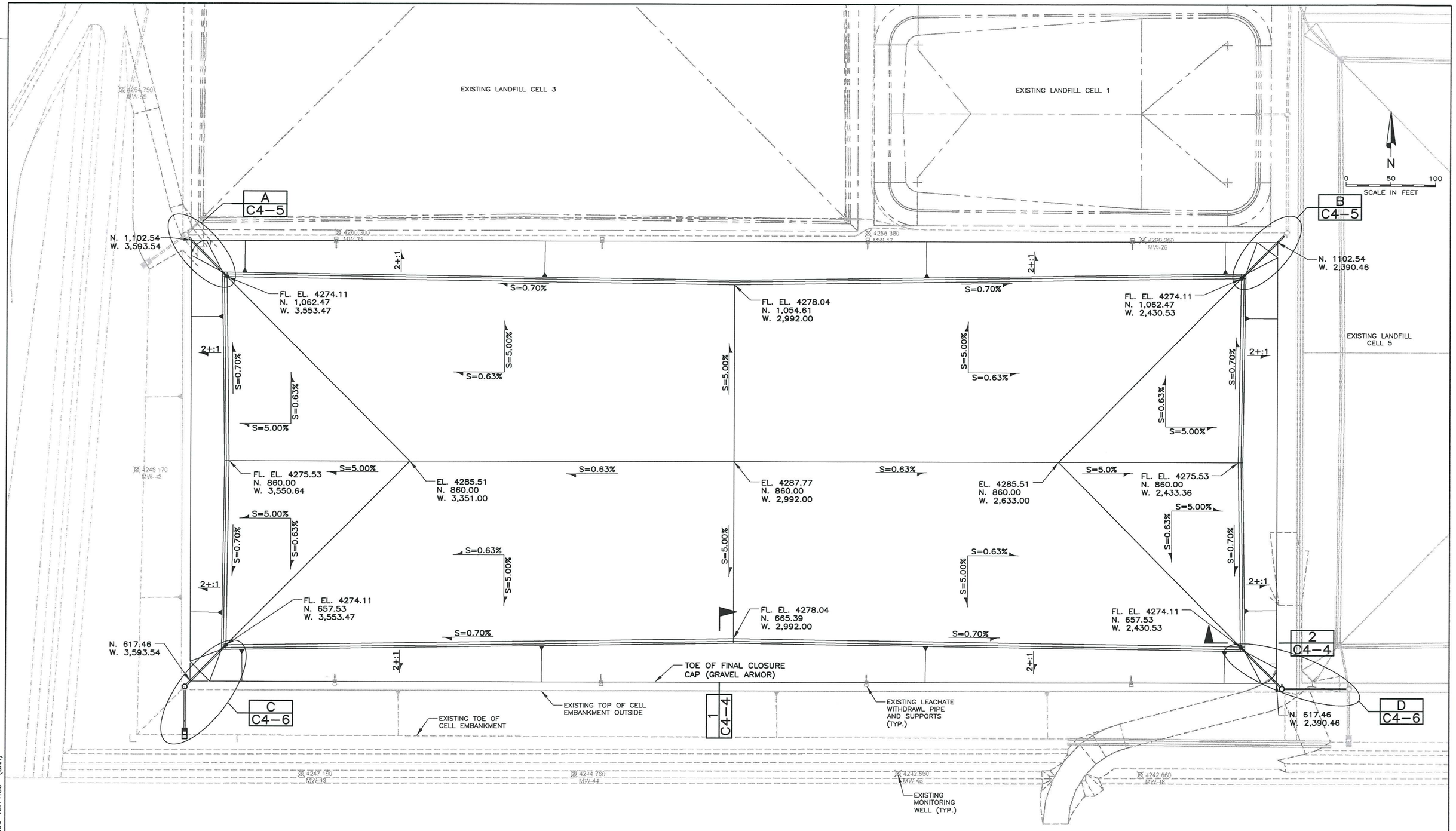

FILE NAME: 064 - CLEAN HARBORS\73.110 - CELLS 4 5 Z CLOSURES\CAD\CELL 4\CURRENT DESIGN\C4-3 CELL 4 CLOSURE - FINAL CLOSURE PLAN.DWG
FILE DATE: 12.7.2009 15:11:36 (CAH)

HANSEN ALLEN & LUCE ENGINEERS

PROFESSIONAL ENGINEER 12/9/09 NO. 151898 MARVIN E. ALLEN

PROJECT ENGINEER

DESIGNED KCS	3				
DRAFTED CAH	2				
CHECKED MEA	1				
DATE DECEMBER 2009	NO.	DATE	REVISIONS	BY	APVD.

SCALE

CleanHarbors® ENVIRONMENTAL SERVICES, INC.

GRASSY MOUNTAIN FACILITY
LANDFILL CELL 4 – CLOSURE
FINAL CLOSURE PLAN

SHEET C4-3

64.73.110

10/07

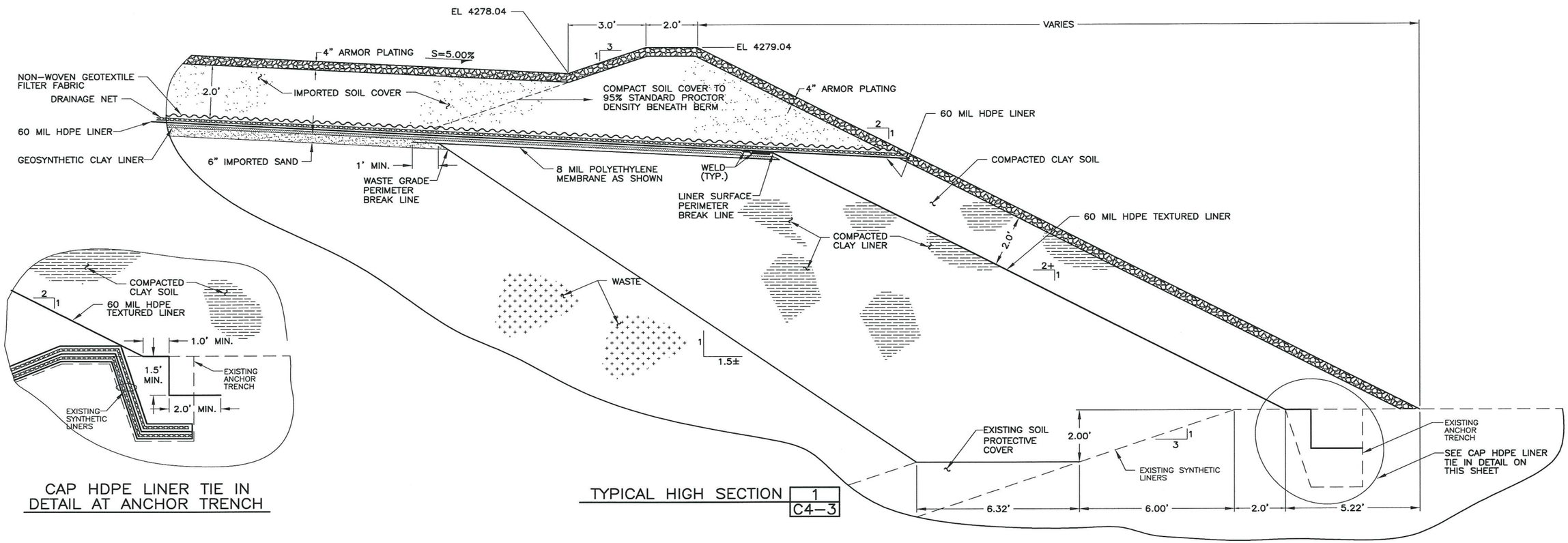

CAP HDPE LINER TIE IN DETAIL AT ANCHOR TRENCH

TYPICAL HIGH SECTION 1 / C4-3

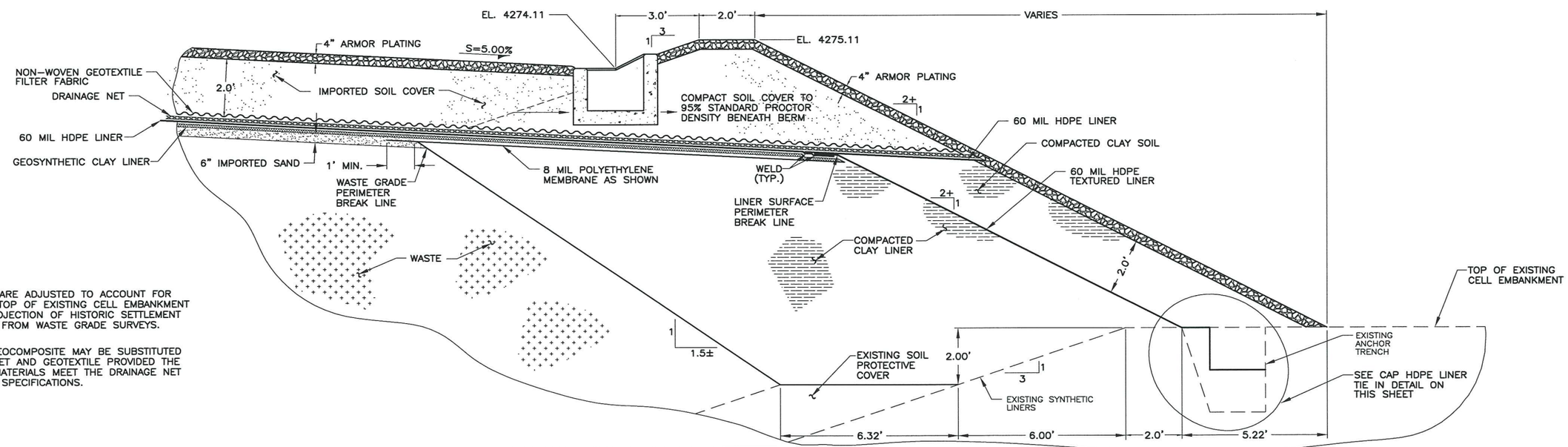

TYPICAL LOW SECTION 2 / C4-3

NOTE:

1. ALL ELEVATIONS ARE ADJUSTED TO ACCOUNT FOR SETTLEMENT OF TOP OF EXISTING CELL EMBANKMENT BASED ON A PROJECTION OF HISTORIC SETTLEMENT RATES OBTAINED FROM WASTE GRADE SURVEYS.
2. SINGLE-SIDED GEOCOMPOSITE MAY BE SUBSTITUTED FOR DRAINAGE NET AND GEOTEXTILE PROVIDED THE GEOCOMPOSITE MATERIALS MEET THE DRAINAGE NET AND GEOTEXTILE SPECIFICATIONS.

FILE NAME: 064 - CLEAN HARBORS\73.110 - CELLS 4 5 Z CLOSURES\CAD\CELL 4\CURRENT DESIGN\C4-4 CELL 4 TYP HIGH LOW SECTIONS.DWG
FILE DATE: 12.7.2009 15:12:04 (CAH)

PROFESSIONAL ENGINEER 12/9/09 NO. 151898 MARVIN E. ALLEN STATE OF UTAH

HANSEN ALLEN & LUCE ENGINEERS

PROJECT ENGINEER

DESIGNED KCS	3				
DRAFTED CAH	2				
CHECKED MEA	1				
DATE DECEMBER 2009	NO.	DATE	REVISIONS	BY	APVD.

SCALE: NOT TO SCALE

CleanHarbors® ENVIRONMENTAL SERVICES, INC.

GRASSY MOUNTAIN FACILITY
LANDFILL CELL 4 – CLOSURE
TYPICAL HIGH-LOW SECTIONS

SHEET C4-4

64.73.110

10/07

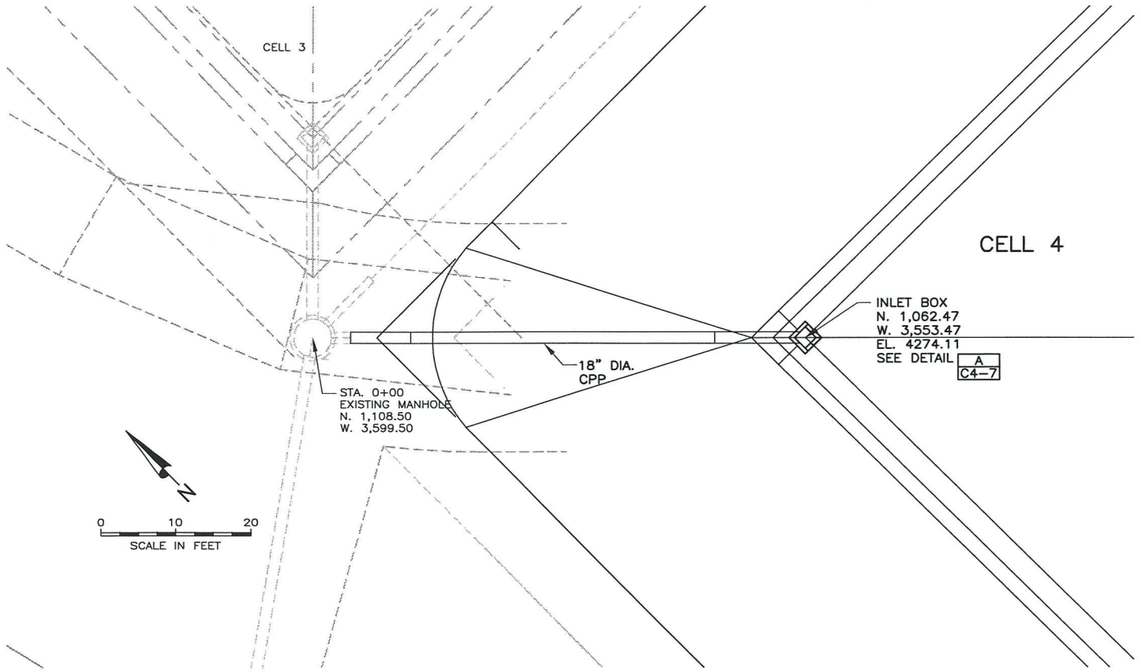

PLAN VIEW

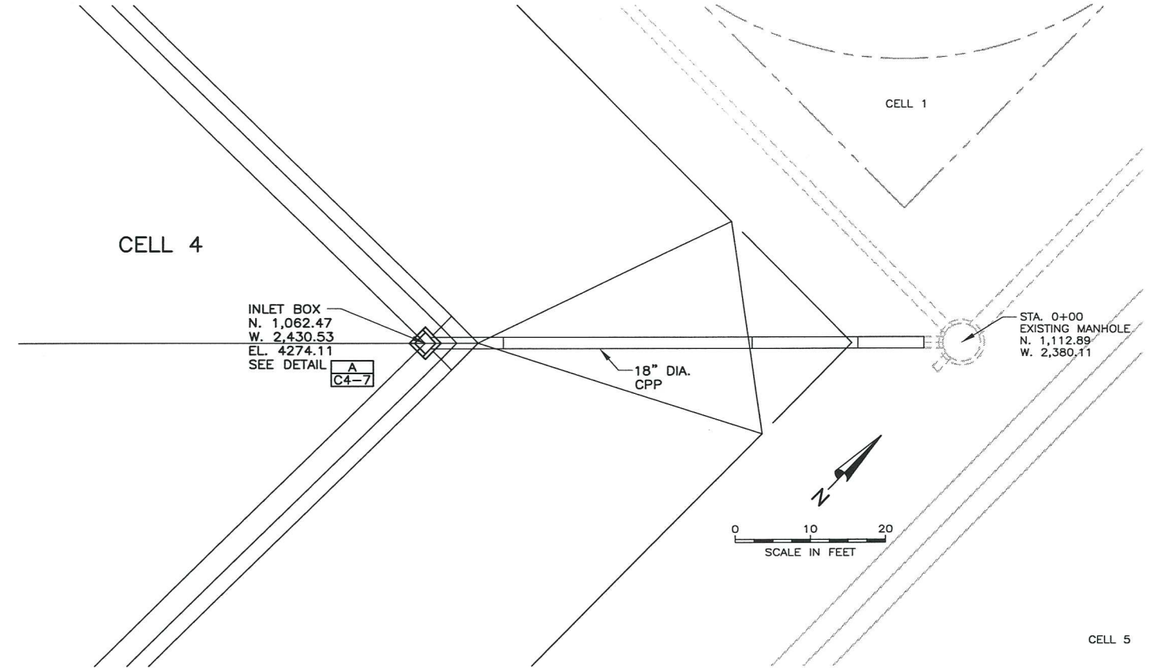

PLAN VIEW

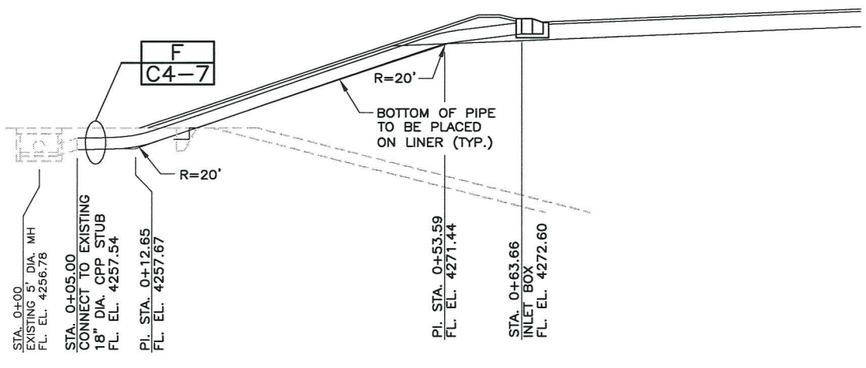

SECTION

NORTHWEST DOWNSPOUT DETAIL A C4-3

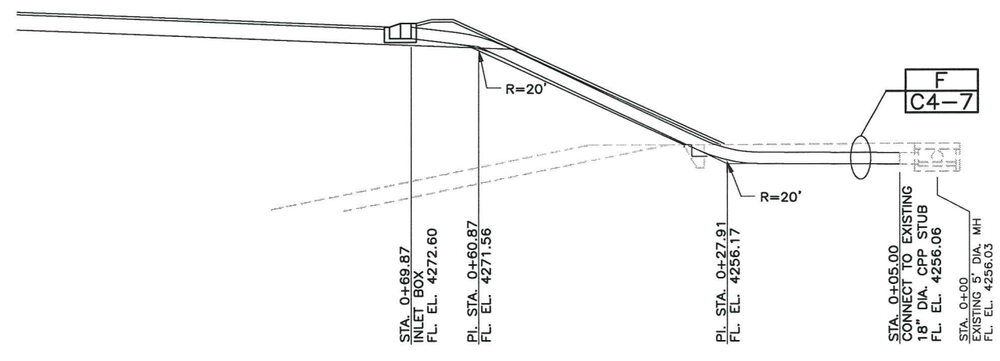

SECTION

NORTHEAST DOWNSPOUT DETAIL B C4-3

FILE NAME: 064 - CLEAN HARBORS\73.110 - CELLS 4 5 Z CLOSURES\CAD\CELL 4\CURRENT DESIGN\C4-5 CELL 4 CLOSURE - NORTH SIDE SECTIONS.DWG
FILE DATE: 12.7.2009 15:12:36 (CAH)

HANSEN ALLEN & LUCE ENGINEERS

PROFESSIONAL ENGINEER 12/9/09 NO. 151898 MARVIN E. ALLEN STATE OF UTAH

PROJECT ENGINEER

DESIGNED KCS	3				
DRAFTED CAH	2				
CHECKED MEA	1				
DATE DECEMBER 2009	NO.	DATE	REVISIONS	BY	APVD.

SCALE

CleanHarbors® ENVIRONMENTAL SERVICES, INC.

GRASSY MOUNTAIN FACILITY
LANDFILL CELL 4 – CLOSURE
DOWNSPOUT SECTIONS

SHEET C4-5

64.73.110

10/07

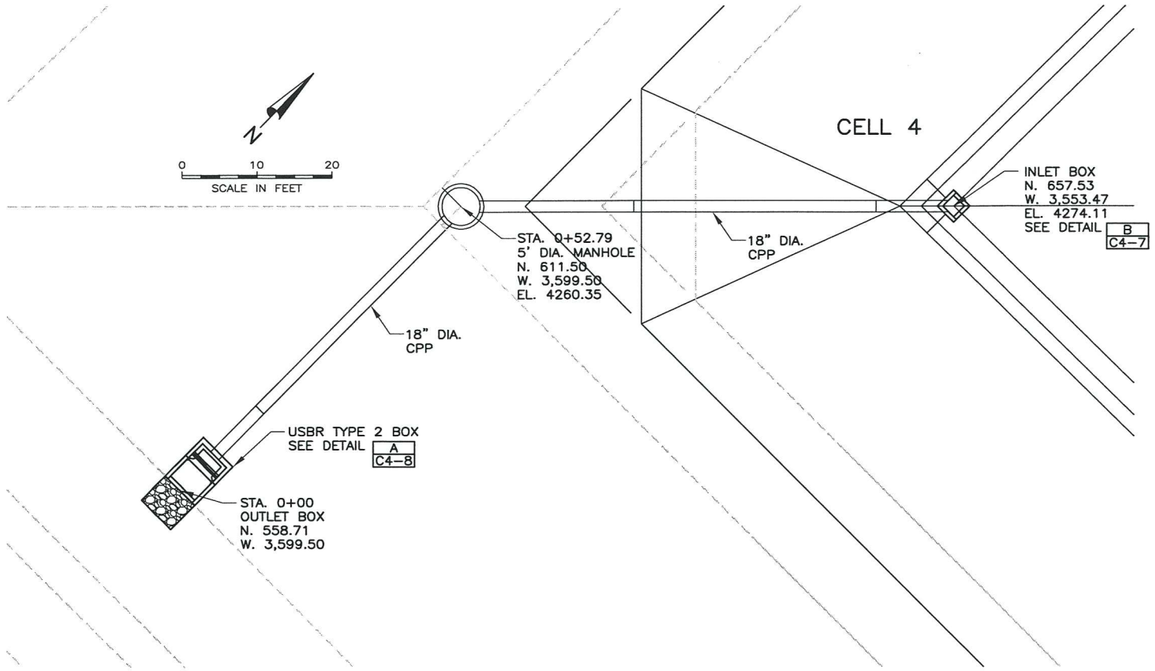

PLAN VIEW

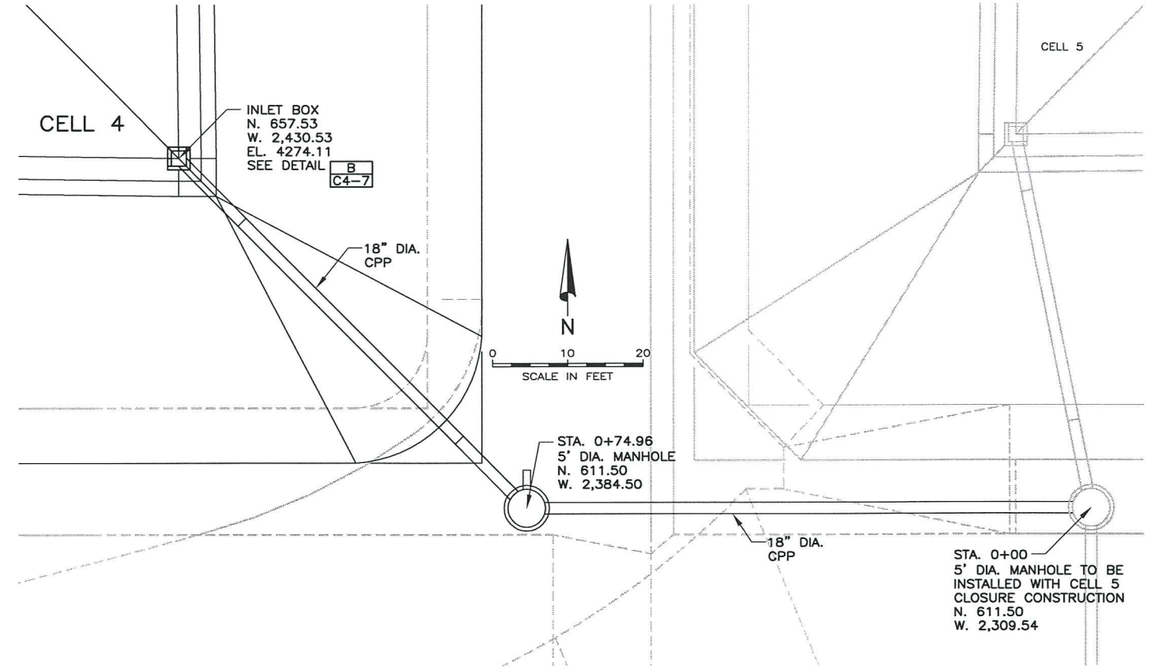

PLAN VIEW

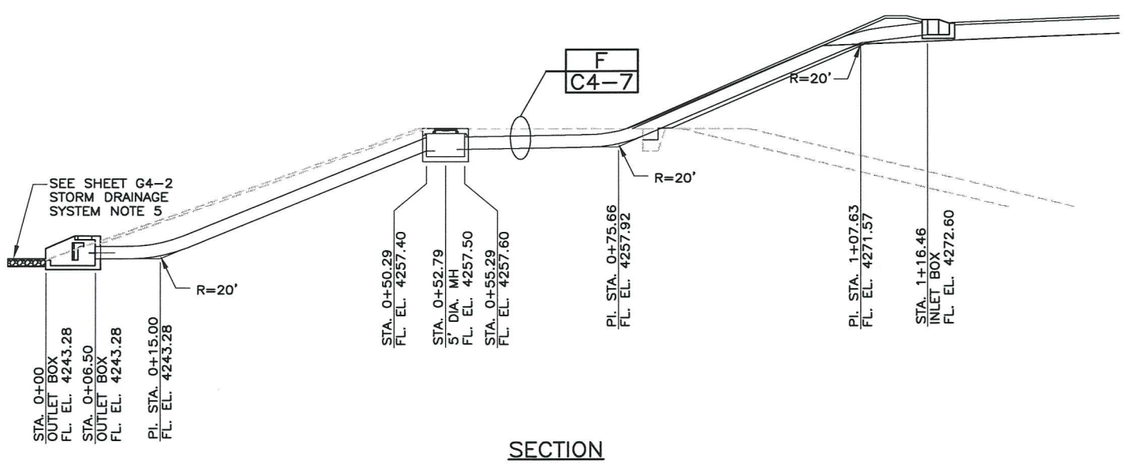

SECTION

SOUTHWEST DOWNSPOUT DETAIL C C4-3

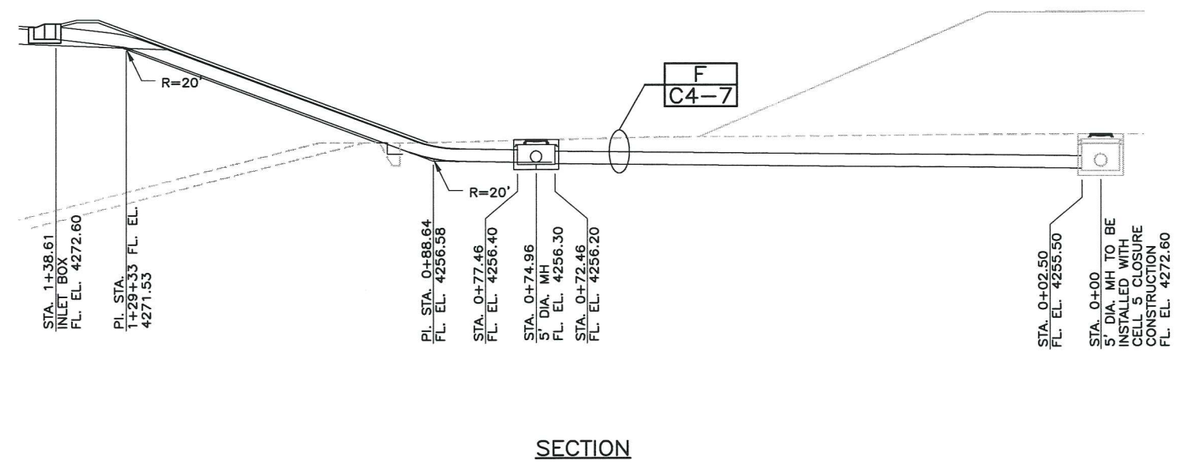

SECTION

SOUTHEAST DOWNSPOUT DETAIL D C4-3

FILE NAME: 064 – CLEAN HARBORS\73.110 – CELLS 4 5 Z CLOSURES\CAD\CELL 4\CURRENT DESIGN\C4-6 CELL 4 CLOSURE – SOUTH SIDE SECTIONS.DWG
FILE DATE: 12.7.2009 15:13:13 (CAH)

PROFESSIONAL ENGINEER 12/4/09 NO. 151896 MARVIN E. ALLEN STATE OF IDAHO

HANSEN ALLEN & LUCE ENGINEERS

PROJECT ENGINEER

DESIGNED KCS	3				
DRAFTED CAH	2				
CHECKED MEA	1				
DATE DECEMBER 2009	NO.	DATE	REVISIONS	BY	APVD.

SCALE

CleanHarbors® ENVIRONMENTAL SERVICES, INC.

GRASSY MOUNTAIN FACILITY
LANDFILL CELL 4 – CLOSURE
DOWNSPOUT SECTIONS

SHEET C4-6

64.73.110

10/07

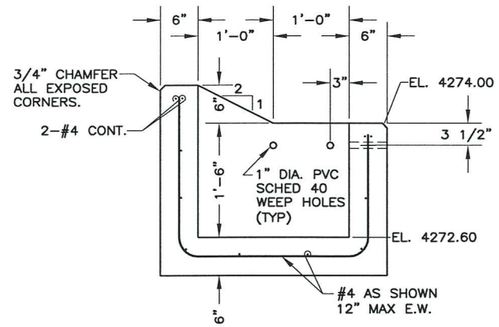

SECTION 1 / — N.T.S.

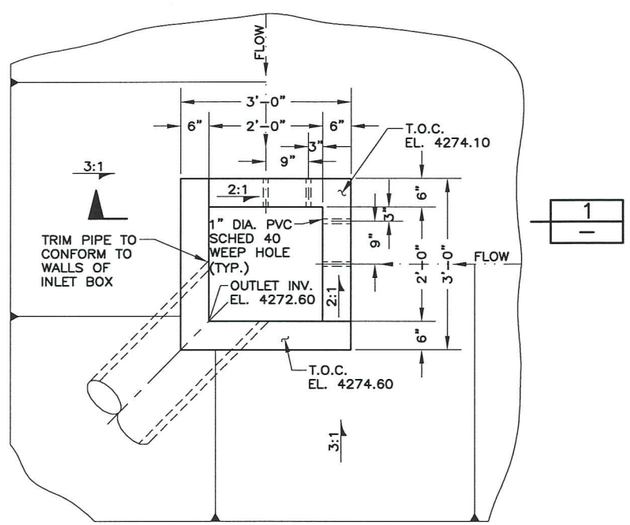

DROP INLET BOX DETAIL A C4-5 B C4-6 N.T.S.

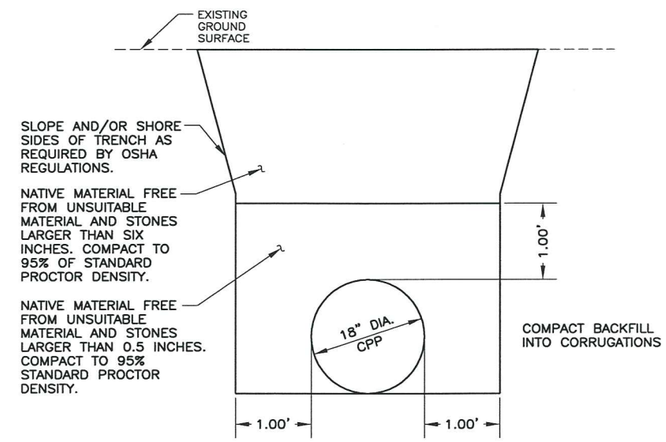

TRENCH DETAIL F C4-5 F C4-6 N.T.S.

FILE NAME: 064 - CLEAN HARBORS\73.110 - CELLS 4 5 Z CLOSURES\CAD\CELL 4\CURRENT DESIGN\C4-7 CELL 4 CLOSURE _ MISCELLANEOUS DETAILS.DWG
FILE DATE: 12.7.2009 15:15:31 (CAH)

HANSEN ALLEN & LUCE inc ENGINEERS

PROFESSIONAL ENGINEER NO. 151898 MARVIN E. ALLEN STATE OF UTAH

PROJECT ENGINEER

DESIGNED KCS	3				
DRAFTED CAH	2				
CHECKED MEA	1				
DATE DECEMBER 2009	NO.	DATE	REVISIONS	BY	APVD.

SCALE NOT TO SCALE

CleanHarbors® ENVIRONMENTAL SERVICES, INC.

GRASSY MOUNTAIN FACILITY
LANDFILL CELL 4 – CLOSURE
MISCELLANEOUS DETAILS

SHEET C4-7

64.73.110

10/07

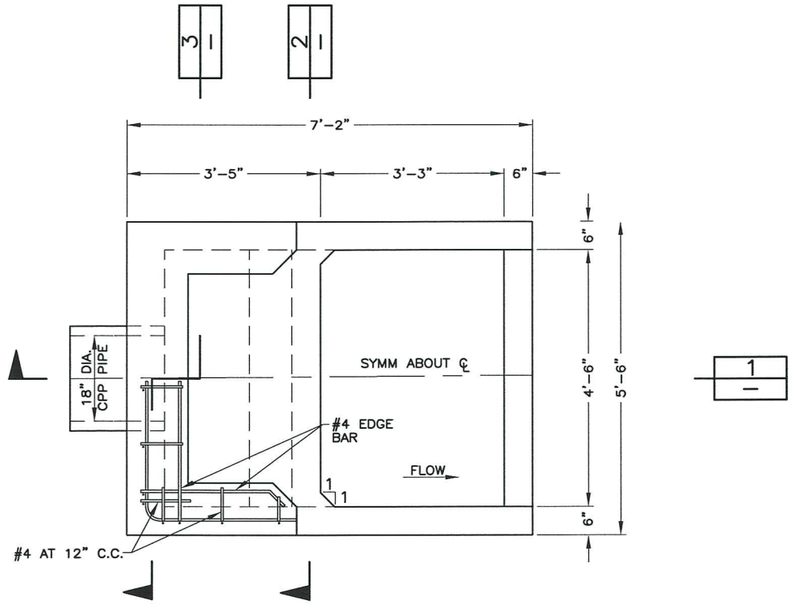

PLAN VIEW

USBR TYPE 2
BAFFLED OUTLET BOX DETAIL A / C4-6

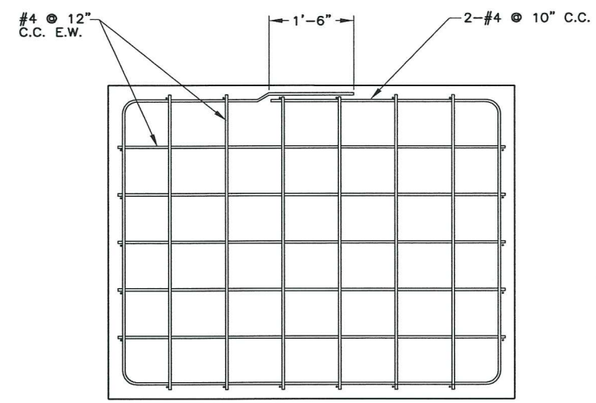

SECTION 4 / —

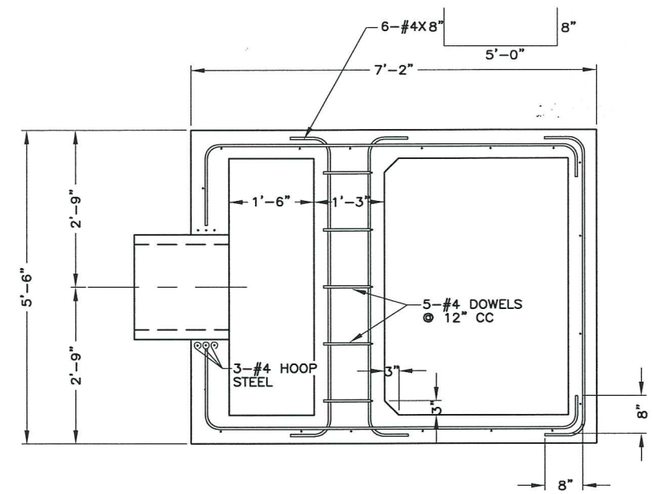

SECTION 5 / —

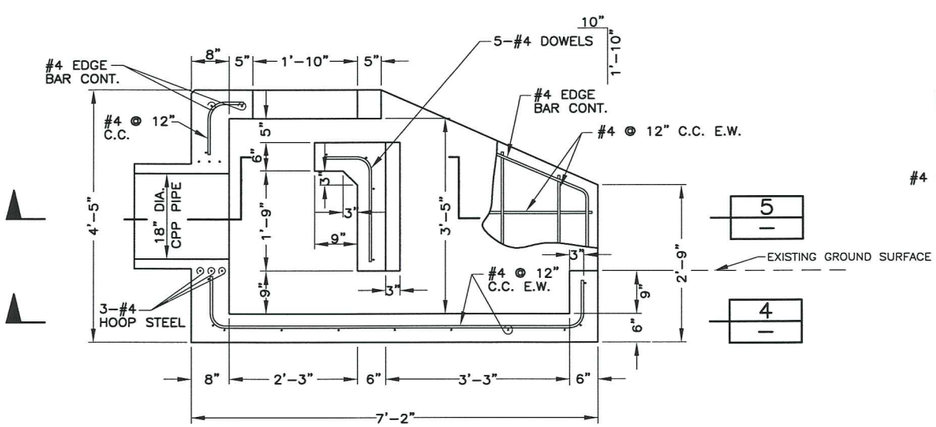

SECTION 1 / —

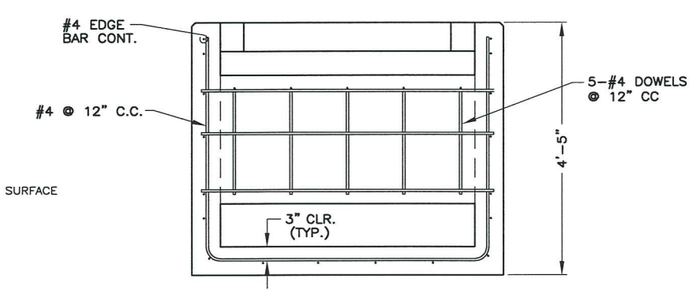

SECTION 2 / —

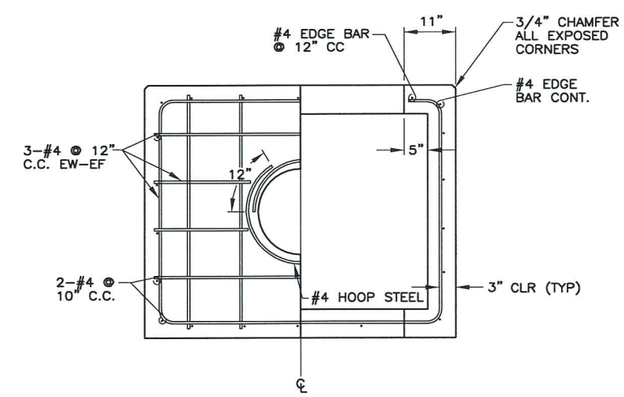

SECTION 3 / —

FILE NAME: 064 - CLEAN HARBORS\73.110 - CELLS 4 5 Z CLOSURES\CAD\CELL 4\CURRENT DESIGN\C4-8 CELL 4 CLOSURE - BAFBOX.DWG
FILE DATE: 12.7.2009 15:16:19 (CAH)

HANSEN ALLEN & LUCE INC. ENGINEERS

PROFESSIONAL ENGINEER 12/9/09 NO. 15188 MARVIN E. ALLEN STATE OF UTAH

PROJECT ENGINEER

DESIGNED KCS	3				
DRAFTED CAH	2				
CHECKED MEA	1				
DATE DECEMBER 2009	NO.	DATE	REVISIONS	BY	APVD.

SCALE: NOT TO SCALE

CleanHarbors® ENVIRONMENTAL SERVICES, INC.

GRASSY MOUNTAIN FACILITY
LANDFILL CELL 4 – CLOSURE
BAFFLED OUTLET BOX

SHEET C4-8
64.73.110

10/07

Appendix B

Closure Drawings

for

Cell 5

CleanHarbors®
ENVIRONMENTAL SERVICES, INC.

GRASSY MOUNTAIN FACILITY

LANDFILL CELL 5 CLOSURE

FACILITY LOCATION
KNOLLS, UTAH
Phone: (435) 884–8900

DECEMBER 2009

REGIONAL HEADQUARTERS
42 LONGWATER DRIVE
NORWELL, MA 02061
Phone: (781) 792–5000

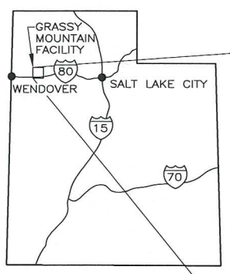

STATE OF UTAH

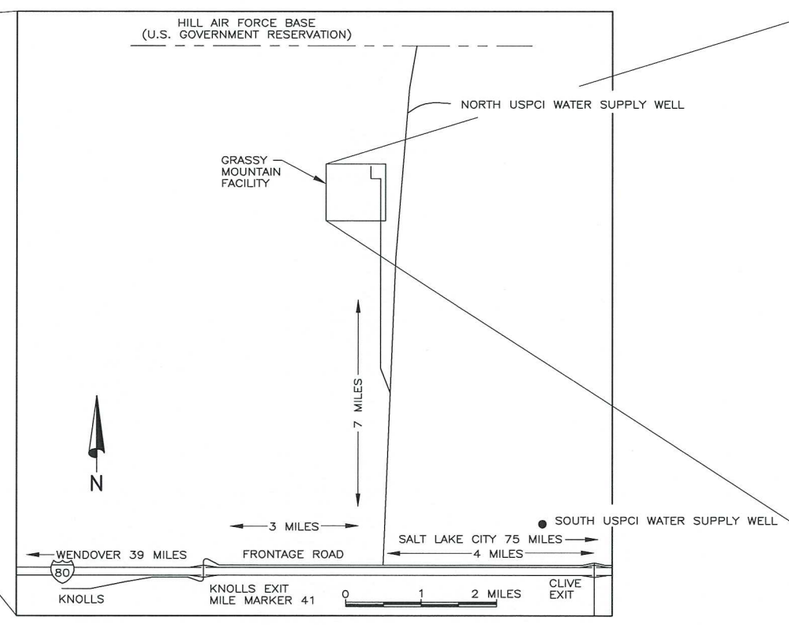

VICINITY MAP

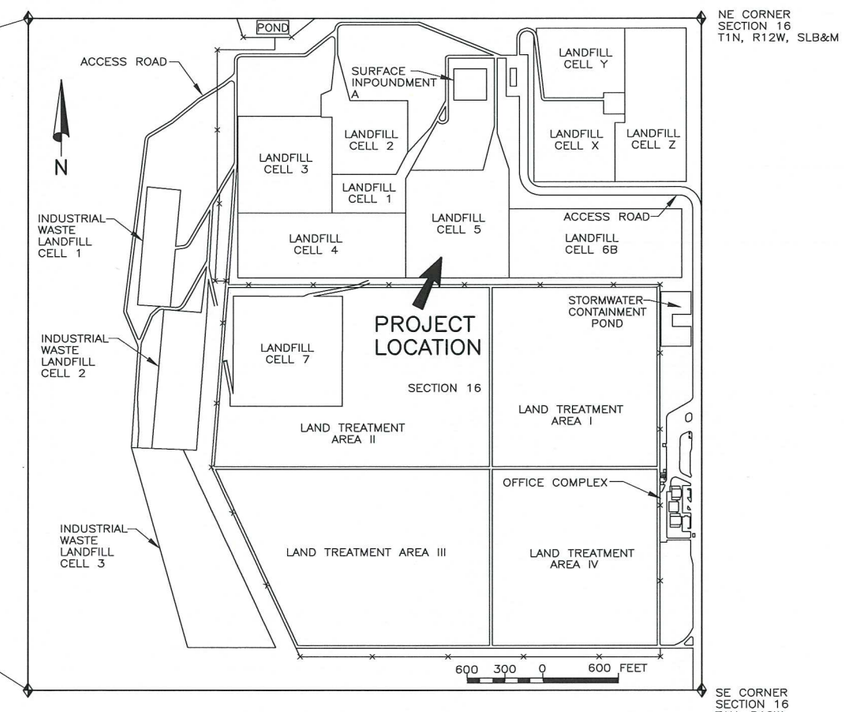

PROJECT LOCATION

PROFESSIONAL ENGINEER
12/9/09
NO. 151898
MARVIN E. ALLEN
STATE OF UTAH

HANSEN ALLEN & LUCE inc
ENGINEERS

CONSULTANTS
ENGINEERS
Salt Lake City
Utah

FILE NAME: 064 – CLEAN HARBORS\73.110 – CELLS 4 5 Z CLOSURES\CAD\CELL 5\CURRENT DESIGN\G5-1 CELL 5 COVER.DWG
FILE DATE: 12.7.2009 15:18:19 (CAH)

7/95

GENERAL NOTES

1. COORDINATES AND ELEVATIONS PROVIDED ARE BASED ON SITE SPECIFIC COORDINATE SYSTEM AND DATUM CONTROL.
2. OBTAIN AND COMPLY WITH ALL REQUIRED ENVIRONMENTAL PERMITS.
3. DEVELOP AND FOLLOW A HEALTH AND SAFETY PLAN FOR THE PROJECT.
4. CONTRACTOR(S) SHALL BE RESPONSIBLE FOR PROJECT AND SITE SAFETY, AND FOR COMPLIANCE WITH SAFETY LAWS AND REGULATIONS.
5. FIELD OFFICE(S), COMMUNICATION EQUIPMENT, AND POTABLE WATER, REQUIRED TO PERFORM WORK TO BE PROVIDED BY CONTRACTOR(S).
6. BORROW SOURCES SHALL BE DESIGNATED BY OWNER.
7. SANITARY FACILITIES TO BE PROVIDED BY FACILITY.
8. CONTRACTOR(S) SHALL PROTECT EXISTING MONITORING WELLS, PEIZOMETERS, LEACHATE WITHDRAWAL PIPES, AND STORM DRAINAGE FACILITIES DURING CONSTRUCTION ACTIVITIES. ANY DAMAGE TO MONITORING WELLS, PIEZOMETERS, LEACHATE WITHDRAWAL PIPES, AND STORM DRAINAGE FACILITIES RESULTING FROM CONTRACTOR ACTIVITIES OR ACTIVITIES BY ANY SUB–CONTRACTOR TO CONTRACTOR SHALL BE CORRECTED AT CONTRACTOR'S EXPENSE. CONTRACTOR SHALL BE FINANCIALLY RESPONSIBLE FOR ALL COSTS TO OWNER RESULTING FROM SUCH DAMAGE.
9. CONSTRUCTION SURVEY CONTROLS FOR THE SITE SHALL BE PROVIDED. EARTHWORK CONTRACTOR(S) SHALL BE RESPONSIBLE FOR ALL ADDITIONAL CONSTRUCTION SURVEY STAKING AND GRADE CONTROL AFTER BEING SUPPLIED WITH SURVEY CONTROLS. ALL CONTRACTOR SURVEY NOTES, GRADE CHECKS, ETC. SHALL BE PROVIDED TO OWNER.
10. OWNER MAY PROVIDE A SURVEY CHECK TO VERIFY CONSTRUCTION IN ACCORDANCE WITH DESIGN LINES AND GRADES. ANY AREAS FOUND NOT TO BE IN COMPLIANCE WITH DESIGN LINES AND GRADES AND ACCEPTABLE GRADING TOLERANCES SHALL BE CORRECTED AT CONTRACTOR EXPENSE. CONTRACTOR SHALL PAY OWNER FOR ANY SUBSEQUENT GRADE CHECKING REQUIRED BY OWNER'S SURVEYOR.
11. CLEARING AND GRUBBING MATERIALS SHALL BE STOCKPILED IN THE AREAS DESIGNATED BY OWNER.
12. NORTH WATER SUPPLY WELL IS LOCATED NORTH 700 FEET AND EAST 250 FEET FROM THE SW CORNER OF SECTION 2, TOWNSHIP 1 NORTH, RANGE 12 WEST, SLB&M. SOUTH WATER SUPPLY WELL IS LOCATED IN THE NE ¼ OF SECTION 13, TOWNSHIP 1 SOUTH, RANGE 12 WEST,SLB&M. CONTRACTOR IS RESPONSIBLE FOR CONVEYANCE OF WATER FROM WELLS TO THE PROJECT LOCATION. SEE COVER SHEET FOR APPROXIMATE LOCATION OF WELLS IN RELATION TO THE PROJECT SITE.

LINING SYSTEM SUBGRADES & SOIL FILL

1. ALL SURFACES PROVIDING SUBGRADES FOR LINING SYSTEMS SHALL BE PROOF ROLLED FOR SOFT AND/OR YIELDING SURFACES. SOFT AND/OR YIELDING SURFACES SHALL BE COMPACTED TO PROVIDE A FIRM SUBGRADE FOR LINING SYSTEMS.
2. COMPACTED CLAY LINER MATERIALS SHALL BE OBTAINED FROM CLAY SOILS IN THE MUD FLAT AREAS WEST OF THE FACILITY. CLAY LINER MATERIALS SHALL BE MIXED THOROUGHLY WITH A DEFLOCCULATING AGENT (SODIUM TRIPOLYPHOSPHATE) AT THE RATE OF 3.5 POUNDS PER 50 CUBIC FEET OF LOOSE MATERIAL PRIOR TO PLACEMENT. ALL CLAY LINER MATERIALS SHALL BE COMPACTED TO 95% OF ASTM D–698 AT A MOISTURE CONTENT BETWEEN MINUS 2% AND PLUS 4% OF OPTIMUM. ALL CLAY LINER SHALL MEET THE REQUIRED PERMEABILITY OF 1 X 10–7 CM/SEC. CLAY LINER SURFACES SHALL BE MAINTAINED UNTIL PLACEMENT OF OVERLYING GEOSYNTHETIC MATERIALS.
3. ALL FILL MATERIALS REQUIRING COMPACTION, ON THE PERIMETER SIDESLOPES, PIPE BACKFILL, AND OTHER DESIGNATED COMPACTION AREAS SHALL BE COMPACTED TO 95% OF ASTM D–698 AT A MOISTURE REQUIRED TO FACILITATE COMPACTION.
4. CONTRACTOR SHALL BE RESPONSIBLE TO PROVIDE A PROPER AND APPROVED SUB–GRADE FOR THE GEOSYNTHETICS MATERIALS.
5. THE SUB–GRADE FOR THE GEOSYNTHETIC MATERIALS SHALL BE FREE OF PROTRUDING ROCKS AND DEBRIS THAT MAY POTENTIALLY CAUSE DAMAGE TO THE GEOSYNTHETIC MATERIALS. THE SUBGRADE SHALL ALSO BE ROLLED WITH A SMOOTH DRUM ROLLER TO LEAVE THE SURFACE SMOOTH AND FREE FROM ABRUPT CHANGES IN GRADE.
6. CONTRACTOR SHALL COORDINATE EXCAVATION AND BACKFILLING OF THE GEOSYNTHETICS ANCHOR TRENCH WITH THE GEOSYNTHETICS INSTALLER. THE BOTTOM OF THE TRENCH SHALL BE LIFT FIRM TO ALLOW FOR PLACEMENT AND COMPACTION OF BACKFILL MATERIALS ABOVE THE GEOSYNTHETICS. ALL BACKFILL SHALL BE COMPACTED TO 95% OF ASTM D–698.
7. BORROW SOURCES FOR 6–INCH THICK IMPORTED SAND AND 2–FOOT THICK IMPORTED SOIL COVER LAYERS TO BE PRE–APPROVED BASED ON THE FOLLOWING TESTS USING LIQUID OBTAINED FROM SYNTHETIC LEACHATE PRODUCED USING BORROW SOURCE SOILS: 1. SCREENING CLAY PORTION OF GEOSYNTHETIC CLAY LINER FOR CHEMICAL COMPATIBILITY TO LIQUIDS (ASTM D6141); 2. SWELL INDEX (ASTM D5890); 3. FLUID LOSS TESTING (ASTM D5891); AND 4.HYDRAULIC CONDUCTIVITY (ASTM D6766 OR ASTM D5084) AS REQUIRED BY THE ENGINEER BASED ON RESULTS OF OTHER TESTING. MAXIMUM HYDRAULIC CONDUCTIVITY OF GCL SHALL MEET AN EQUIVALENCY OF A 2–FOOT THICK COMPACTED CLAY LINER WITH A HYDRAULIC CONDUCTIVITY OF 1X10–7 CM/SEC.

GENERAL GEOSYNTHETICS

1. MANUFACTURER'S CERTIFICATIONS SHALL BE PROVIDED FOR ALL RAW AND MANUFACTURED MATERIALS AT THE TIME OF SHIPMENT. CERTIFICATIONS SHALL BE IN ACCORDANCE WITH THE MANUFACTURER'S MATERIAL SPECIFICATIONS AND PROJECT CQA PLAN CRITERIA AND SHALL INCLUDE ALL TEST DATA FOR MATERIALS DELIVERED AND AT A MINIMUM, THE TEST FREQUENCIES DESIGNATED IN THE MANUFACTURER'S QUALITY ASSURANCE MANUALS AND SPECIFICATIONS AND THE PROJECT CQA PLAN.
2. GEOSYNTHETIC INSTALLERS ARE REQUIRED TO OBTAIN AND BECOME FAMILIAR WITH ALL MANUFACTURER'S HANDLING AND INSTALLATION SPECIFICATIONS FOR ALL GEOSYNTHETIC MATERIALS PRIOR TO BEGINNING INSTALLATION.

GENERAL GEOSYNTHETICS (CONT.)

3. ALL GEOSYNTHETIC MATERIALS SHALL BE LOADED, TRANSPORTED, OFF–LOADED, STORED, AND HANDLED IN ACCORDANCE WITH MANUFACTURER RECOMMENDATIONS. AREAS FOR STORING OF GEOSYNTHETIC MATERIALS SHALL BE GRADED TO PROVIDE DRAINAGE AWAY FROM THE STORED MATERIALS. ROLLS OF GCL SHALL BE STORED IN SUCH A WAY TO BE SUPPORTED ABOVE THE GROUND SURFACE AND SHALL BE HANDLED TO AVOID DAMAGE TO THE PROTECTIVE COVERING TO MINIMIZE THE POTENTIAL OF PRE–MATURE HYDRATION.
4. AT A MINIMUM, ALL GEOSYNTHETIC MATERIALS SHALL BE INSTALLED IN ACCORDANCE WITH MANUFACTURER'S RECOMMENDATIONS AND INSTALLATION GUIDES AND IN ACCORDANCE WITH THE PROJECT SPECIFICATIONS AND CQA PLAN.
5. THE GEOSYNTHETIC INSTALLER SHALL PROVIDE A SUBGRADE ACCEPTANCE CERTIFICATION FOR ALL AREAS OF GCL DEPLOYMENT. THE CERTIFICATION SHALL INDICATE ALL GEOMEMBRANE PANEL NUMBERS BELOW WHICH THE SOIL SUBGRADE HAS BEEN ACCEPTED.
6. ONLY LOW GROUND PRESSURE VEHICLES SUCH AS SOFT TIRE ATV'S AND SIMILAR VEHICLES SHALL BE ALLOWED TO OPERATE ON THE GEOSYNTHETIC MATERIALS TO ASSIST IN DEPLOYMENT. CARE SHALL BE EXERCISED TO AVOID ANY ACTIVITY THAT MAY CAUSE DAMAGE TO GEOSYNTHETIC MATERIALS WHILE USING THE LOW GROUND PRESSURE VEHICLES.
7. PANELS OF GEOSYNTHETIC MATERIALS SHALL BE PLACED SUCH THAT, AS MUCH AS POSSIBLE, SEAMS ARE PARALLEL TO THE DIRECTION OF THE SLOPE.
8. PANELS OF GCL SHALL BE PLACED TO LIE FLAT ABOVE THE PREPARED SOIL SUBGRADE WITH NO WRINKLES. SUBSEQUENT GEOSYNTHETIC MATERIALS SHALL BE PLACED AS MUCH AS PRACTICAL TO LIE FLAT ABOVE PREVIOUS COURSES OF GEOSYNTHETIC MATERIALS.
9. ALL GEOSYNTHETIC SEAMS SHALL BE OVERLAPPED WITH THE UP–GRADIENT PANEL OVERLAPPING THE DOWN–GRADIENT PANEL IN A SHINGLE TYPE CONFIGURATION.
10. ALL GEOSYNTHETIC MATERIALS DAMAGED DURING LOADING, OFF–LOADING, TRANSPORT, STORAGE, INSTALLATION, ETC. SHALL BE REMOVED AND REPLACED OR REPAIRED IN ACCORDANCE WITH MANUFACTURER'S RECOMMENDATIONS. MINIMUM OVERLAPS FOR PATCHES OVER DAMAGED GEOSYNTHETIC MATERIALS SHALL BE 12 INCHES IN ALL DIRECTIONS FROM THE DAMAGED AREAS.

GEOSYNTHETIC CLAY LINER

1. GCL MATERIALS SHALL BE NEEDLE PUNCH REINFORCED.
2. ALL DEPLOYED GCL MATERIALS SHALL BE COVERED BY THE END OF EACH WORK DAY TO MINIMIZE EVAPORATION OF MOISTURE WITHIN THE BENTONITE AND TO PROTECT THE GCL MATERIALS FROM EXPOSURE TO RAINY AND SNOWY WEATHER.
3. SEAMING SHALL BE IN ACCORDANCE WITH MANUFACTURER'S RECOMMENDATIONS, THE PROJECT SPECIFICATIONS, AND THE PROJECT CQA PLAN.
4. GCL MATERIALS THAT ARE MANUFACTURED TO PROVIDE SELF–SEALING SEAMS AND DO NOT REQUIRE A BENTONITE BEAD SHALL RECEIVE A BENTONITE BEAD ONLY WHEN THE SELF–SEALING DESIGN IS COMPROMISED ON THE ENDS OF PANELS AND WHERE THE SELF–SEALING GROOVE (IF PART OF THE SELF–SEALING DESIGN) HAS BEEN REMOVED FROM PARTIAL WIDTH ROLLS.
5. GCL MATERIALS THAT HAVE NOT BEEN MANUFACTURED TO PROVIDE SELF SEALING SEAMS SHALL RECEIVE A BENTONITE BEAD TO PROVIDE THE SEAM SEAL IN ACCORDANCE WITH MANUFACTURER'S RECOMMENDATIONS.
6. BENTONITE BEADS SHALL BE PLACED APPROXIMATELY AT THE CENTER OF THE OVERLAP FOR SEAMS.
7. LONGITUDINAL SEAMS SHALL RECEIVE A MINIMUM OVERLAP OF 9 INCHES OR GREATER IF REQUIRED BY MANUFACTURER'S SPECIFICATIONS.
8. END–OF–PANEL SEAMS SHALL RECEIVE A MINIMUM OVERLAP OF 24 INCHES OR GREATER IF REQUIRED BY MANUFACTURER'S SPECIFICATIONS.

GEOMEMBRANE LINER

1. NO SMOKING WILL BE ALLOWED BY ANY ENTITY ON THE GEOSYNTHETIC MATERIALS.
2. GEOMEMBRANE MATERIALS PLACED ON THE 2H:1V PERIMETER SLOPES SHALL BE TEXTURED ON BOTH SIDES.
3. GEOMEMBRANE MATERIALS PLACED ON THE TOP 5% SLOPES MAY BE SMOOTH OR TEXTURED AS DIRECTED BY THE OWNER.
4. NO GEOMEMBRANE MATERIALS SHALL BE DEPLOYED IN SUB–FREEZING TEMPERATURES UNLESS APPROVED BY OWNER WITH AN APPROVED COLD WEATHER DEPLOYMENT PLAN.
5. GEOSYNTHETICS INSTALLER SHALL INSTALL SUFFICIENT SAND BAGS TO HOLD THE GEOMEMBRANE IN PLACE UNDER REASONABLY EXPECTED WIND CONDITIONS.
6. WRINKLES CAUSED BY PANEL PLACEMENT OR THERMAL EXPANSION SHALL BE MINIMIZED.
7. INSTALLER SHALL PROVIDE AN APPROVED PANEL PLACEMENT PLAN PRIOR TO DEPLOYMENT. ANY CHANGES TO THE PANEL PLACEMENT PLAN SHALL BE APPROVED BY OWNER AND SHALL BE PROVIDED BY INSTALLER IN AS–BUILD DRAWINGS.
8. PANELS SHALL BE OVERLAPPED SUFFICIENTLY TO AFFECT A GOOD WELD AND GOOD SEAMING. IN NO CASE SHALL OVERLAPS BE LESS THAN 3 INCHES.
9. NO SEAMING SHALL BE ALLOWED IN SUB–FREEZING TEMPERATURES WITHOUT OWNER APPROVAL OF AN APPROPRIATE COLD WEATHER SEAMING PLAN AND ONLY AFTER PROPER DEMONSTRATION OF PRE–QUALIFIED TEST SEAMS.
10. SEAMING SHALL PRIMARILY BE WITH FUSION WELDING EQUIPMENT AND TECHNIQUES. EXTRUSION WELDING SHALL BE USED WHEN FUSION WELDING IS NOT POSSIBLE (PIPE PENETRATIONS, PATCHES, REPAIRS, SHORT SEAMS, ETC.).
11. FISHMOUTHS OR EXCESSIVE WRINKLES AT SEAM OVERLAPS SHALL BE MINIMIZED AND REMOVED WHEN NECESSARY.

GEOMEMBRANE LINER (CONT.)

12. ALL ON–SITE TESTING AND QUALITY CONTROL SHALL BE PERFORMED AND DOCUMENTED BY INSTALLER. ON–SITE TESTING SHALL INCLUDE DESTRUCTIVE TESTING FOR TEST SEAMS AND FOR PRODUCTION SEAMS, NON–DESTRUCTIVE AIR PRESSURE TESTING FOR 100% OF FUSION WELDED SEAMS (INCLUDING REPAIRS), AND VACUUM TESTING FOR 100% OF EXTRUSION WELDED SEAMS (INCLUDING REPAIRS).
13. FIELD TESTING AND QUALITY CONTROL SHALL FOLLOW, AT A MINIMUM, THE REQUIREMENTS PROVIDED IN SECTION 3.05 OF THE 2007 REVISION OF THE INTERNATIONAL ASSOCIATION OF GEOSYNTHETIC INSTALLERS HDPE AND LLDPE GEOMEMBRANE INSTALLATION SPECIFICATION, THE MANUFACTURERS INSTALLATION PROCEDURES, AND/OR THE PROJECT SPECIFICATIONS AND CQA PLAN, WHICHEVER IS MOST STRINGENT.
14. ALL QUALITY CONTROL DOCUMENTATION SHALL BE PROVIDED TO QUALITY ASSURANCE PERSONNEL ON A DAILY BASIS.

GEONET AND DRAINAGE COMPOSITE

1. GEOMEMBRANE MATERIALS SHALL BE CLEANED OF DIRT AND DEBRIS PRIOR TO DEPLOYMENT OF GEONET AND DRAINAGE COMPOSITS.
2. GEONETS SHALL BE MAINTAINED CLEAN OF DIRT AND DEBRIS UNTIL PLACEMENT OF OVERLYING NON–WOVEN GEOTEXTILE FILTER FABRIC.
3. OVERLAPS SHALL BE, AT A MINIMUM, THE DIMENSIONS RECOMMENDED BY THE MANUFACTURES, PROJECT SPECIFICATIONS, AND PROJECT CQA PLAN.
4. GEONET SEAMS SHALL BE SECURED OR FASTENED USING WIRE TIES AT A MINIMUM SPACING OF 5 FEET ALONG LONGITUDINAL SEAMS AND A MINIMUM OF 2 FEET ALONG END SEAMS.
5. DRAINAGE COMPOSITE SHALL BE FASTENED OR SECURED WITH HEAT BONDING, OR OTHER APPROVED METHOD, BETWEEN GEOTEXTILE FABRIC MATERIALS ALONG THE ENTIRE LENGTH OF THE SEAMS.
6. SINGLE–SIDED GEOCOMPOSITE MAY BE USED IN–LIEU OF DRAINAGE NET AND GEOTEXTILE PROVIDED IT MEETS PROJECT SPECIFICATIONS.

NON–WOVEN GEOTEXTILE

1. NON–WOVEN GEOTEXTILE SHALL BE AT LEAST 8 OZ. OR MORE.
2. OVERLAPS OF SEAMS SHALL BE, AT A MINIMUM, THE DIMENSIONS RECOMMENDED BY THE MANUFACTURES. SEAMS SHALL BE SECURED BY CONTINUOUS HEAT BONDING OR SEWING ALONG THE ENTIRE LENGTH OF THE SEAMS.

PROTECTIVE SOIL COVER

1. CONTRACTOR SHALL EXERCISE CARE DURING PLACEMENT OF PROTECTIVE SOIL COVER MATERIALS. A MINIMUM COVER THICKNESS AS DESIGNATED IN THE PROJECT SPECIFICATIONS AND/OR THE PROJECT CQA PLAN SHALL BE MAINTAINED AT ALL TIMES BETWEEN THE TIRES OR TRACKS OF EQUIPMENT AND THE UNDERLYING GEOSYNTHETIC MATERIALS.
2. NO SHARP, ABRUPT, OR PIVOTING TURNS SHALL BE ALLOWED BY EQUIPMENT USED ABOVE THE PROTECTIVE SOIL COVER THAT MAY CAUSE SOIL DISPLACEMENT AND DAMAGE TO UNDERLYING GEOSYNTHETIC MATERIALS.
3. AS NEEDED, CONTRACTOR SHALL USE AN EXCAVATOR OR OTHER SUITABLE EQUIPMENT TO PLACE PROTECTIVE SOIL COVER MATERIAL ON THE GEOSYNTHETIC MATERIALS OUT IN FRONT OF THE LEADING EDGE OF THE PROTECTIVE SOIL COVER. THIS WILL PROVIDE WEIGHT TO HOLD THE GEOSYNTHETIC MATERIALS IN PLACE AND REDUCE THE POTENTIAL OF CREATING LARGE WRINKLES AND WAVES IN THE GEOSYNTHETIC MATERIALS.
4. ANY WAVES OR WRINKLES THAT BEGIN TO FORM SHALL BE TRAPPED BY PLACING SUFFICIENT PROTECTIVE SOIL COVER BEYOND THE WAVES OR WRINKLES TO HOLD THEM IN PLACE AND KEEP THEM FROM COMBINING INTO LARGER WAVES OR WRINKLES.

GRAVEL ARMOR PLATING (STONE MULCH)

GRAVEL ARMOR PLATING (OR STONE MULCH) MAY BE OBTAINED FROM THE GRAVEL PIT LOCATED EAST OF THE FACILITY AT THE BASE OF THE GRAY BACK MOUNTAINS (IF A MINING PERMIT IS OBTAINED FROM THE BLM BY OWNER).

2. STONE MULCH SHALL BE PLACED TO A MINIMUM THICKNESS OF 4 INCHES ON ALL CLOSURE SURFACES.
3. MINIMUM D50 SIZE FOR STONE MULCH SHALL BE 0.9 INCH AND SHALL BE VERIFIED BY TESTING.

STORM DRAINAGE SYSTEM

ALL MANHOLES, LIDS, AND RINGS AND COVERS SHALL BE RATED FOR H20 LOADINGS.

2. RINGS AND COVERS SHALL PROVIDE A MINIMUM OPENING FOR ACCESS OF 30 INCHES.
3. CAST–IN–PLACE CONCRETE SHALL HAVE A MINIMUM STRENGTH OF 4,000 PSI.
4. CONTRACTOR TO OBTAIN SURFACE ELEVATIONS AT ALL MANHOLES TO DETERMINE MANHOLE DEPTHS PRIOR TO FABRICATION. CONTRACTOR IS RESPONSIBLE TO DETERMINE ALL MANHOLE DEPTHS.
5. RIPRAP APRON AT CONCRETE BAFFLED OUTLETS TO EXTEND A MINIMUM DISTANCE OF 5 FEET, TO BE 12 INCHES THICK, AND HAVE A D_{50}=3".
6. TYPE L RIPRAP AND TYPE II FILTER TO EXTEND AT A RADIUS OF 14 FEET MINIMUM FROM THE DOWNSPOUT PIPE OUTLET AND TO CONSIST OF THE FOLLOWING GRADATIONS:

	% SMALLER BY WEIGHT	INTERMEDIATE ROCK DIMENSION (INCHES)	MEAN ROCK DIAMETER D_{50} (INCHES)
TYPE L RIPRAP	70–100	14	
	50–70	12	
	35–50	9	9
	2–10	3	

	U.S. STANDARD SIEVE SIZE	PERCENT PASSING BY WEIGHT
TYPE II GRANULAR FILTER	3–INCH	90–100
	3/4 INCH	35–90
	NO. 4	8–30
	NO. 16	0–10
	NO. 200	0–3

INDEX OF DRAWINGS

GENERAL

G5–1 COVER SHEET
G5–2 INDEX SHEET

CIVIL–CELL 5 CLOSURE

C5–1 WASTE GRADE PLAN
C5–2 LINER SURFACE PLAN
C5–3 FINAL CLOSURE PLAN
C5–4 TYPICAL HIGH–LOW SECTIONS
C5–5 DOWNSPOUT SECTIONS
C5–6 DOWNSPOUT SECTIONS
C5–7 MISCELLANEOUS DETAILS
C5–8 BAFFLED OUTLET BOX

SECTION & DETAIL IDENTIFICATION

SECTION IDENTIFICATION

SECTION CUT ON DRAWING NO. 6 AND SHOWN ON DRAWING NO. 8
ON DRAWING NO. 6 THIS SECTION IS REFERENCED AS:

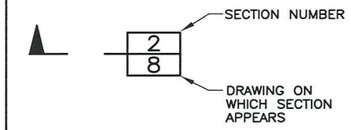

ON DRAWING NO. 8, THIS SECTION IS IDENTIFIED AS:

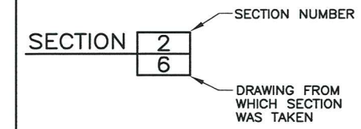

DETAIL IDENTIFICATION

DETAIL CALL–OUT ON DRAWING NO. 6 AND SHOWN ON DRAWING NO. 8
ON DRAWING NO. 6 THIS DETAIL IS REFERENCED AS:

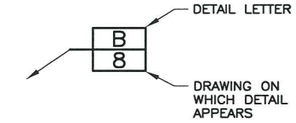

ON DRAWING NO. 8, THIS DETAIL IS IDENTIFIED AS:

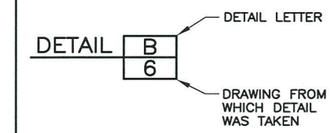

NOTES:

1. IF SECTION AND DETAILS ARE SHOWN ON THE SAME DRAWING AS SECTION CUTS AND SECTION OR DETAIL CALL–OUTS DRAWING NUMBER IS REPLACED BY A LINE.
2. DETAIL LETTERS "I" AND "O" NOT USED.

TABLE OF ABBREVIATIONS

●	=	AIR GAS VENT	MH	=	MANHOLE
@	=	AT	MIN.	=	MINIMUM
AVG.	=	AVERAGE	N.	=	NORTH
C.C.	=	CENTER TO CENTER	N.T.S.	=	NOT TO SCALE
℄	=	CENTER LINE	O.C.	=	ON CENTER
CLR.	=	CLEARANCE	PC	=	POINT OF CURVE
CONT.	=	CONTINUOUS	PI	=	POINT OF INTERSECTION
CPP	=	CORRUGATED POLYETHYLENE PIPE	PSI	=	POUND PER SQUARE INCH
DIA.	=	DIAMETER	PT	=	POINT OF TANGENT
DWG	=	DRAWING	REINF	=	REINFORCEMENT
E.	=	EAST	SDR	=	STANDARD DIMENSIONAL RATIO
EF	=	EACH FACE	SF	=	SQUARE FEET
EL.	=	ELEVATION	SQ.	=	SQUARE
E.W.	=	EACH WAY	STA.	=	STATION
FL	=	FLOW LINE	TL	=	TOP OF LINER
HDPE	=	HIGH DENSITY POLYETHYLENE	T.O.C.	=	TOP OF CONCRETE
ID	=	INSIDE DIAMETER	TYP.	=	TYPICAL
MAX.	=	MAXIMUM	UBC	=	UNTREATED BASE COURSE

FILE NAME: 064 – CLEAN HARBORS\73.110 – CELLS 4 5 Z CLOSURES\CAD\CELL 5\CURRENT DESIGN\G5–2 CELL 5 INDEX_SHEET.DWG
FILE DATE: 12.7.2009 15:20:12 (CAH)

HANSEN ALLEN & LUCE ENGINEERS

PROFESSIONAL ENGINEER 12/9/09 NO. 151808 MARVIN E. ALLEN STATE OF UTAH

PROJECT ENGINEER

DESIGNED	KCS	3
DRAFTED	CAH	2
CHECKED	MEA	1
DATE	DECEMBER 2009	NO.

DATE | REVISIONS | BY | APVD.

SCALE NOT TO SCALE

CleanHarbors® ENVIRONMENTAL SERVICES, INC.

GRASSY MOUNTAIN FACILITY
LANDFILL CELL 5 – CLOSURE
INDEX SHEET

SHEET G5–2
64.73.110

10/07

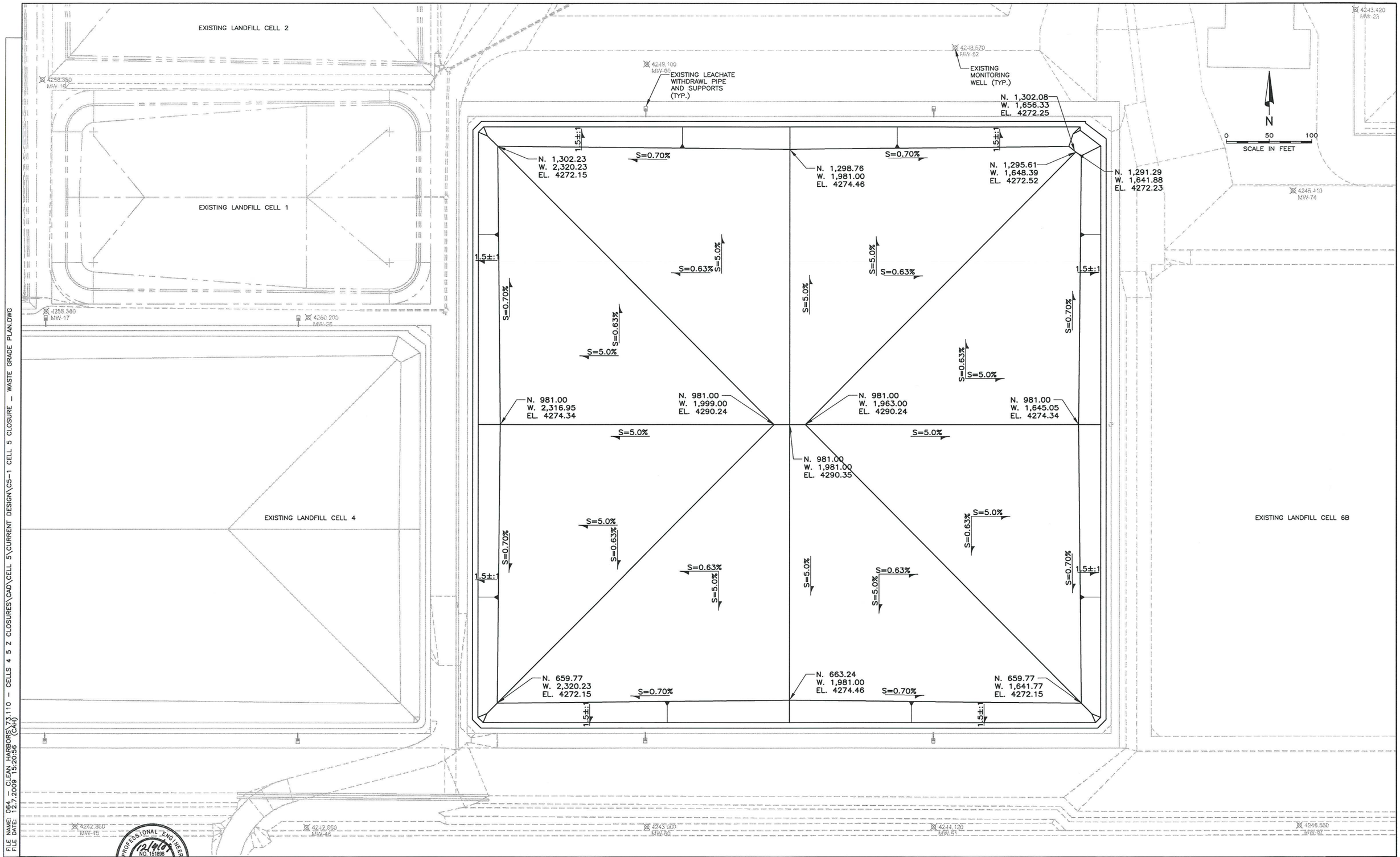

FILE NAME: 064 – CLEAN HARBORS\73.110 – CELLS 4 5 Z CLOSURES\CAD\CELL 5\CURRENT DESIGN\C5-1 CELL 5 CLOSURE _ WASTE GRADE PLAN.DWG
FILE DATE: 12.7.2009 15:20:56 (CAH)

HANSEN ALLEN & LUCE inc. ENGINEERS

PROFESSIONAL ENGINEER NO. 151898 MARVINE ALLEN STATE OF UTAH

PROJECT ENGINEER

DESIGNED KCS	3			
DRAFTED CAH	2			
CHECKED MEA	1			
DATE DECEMBER 2009	NO.	DATE	REVISIONS	BY / APVD.

SCALE

CleanHarbors® ENVIRONMENTAL SERVICES, INC.

GRASSY MOUNTAIN FACILITY
LANDFILL CELL 5 – CLOSURE
WASTE GRADE PLAN

SHEET C5–1

64.73.110

10/07

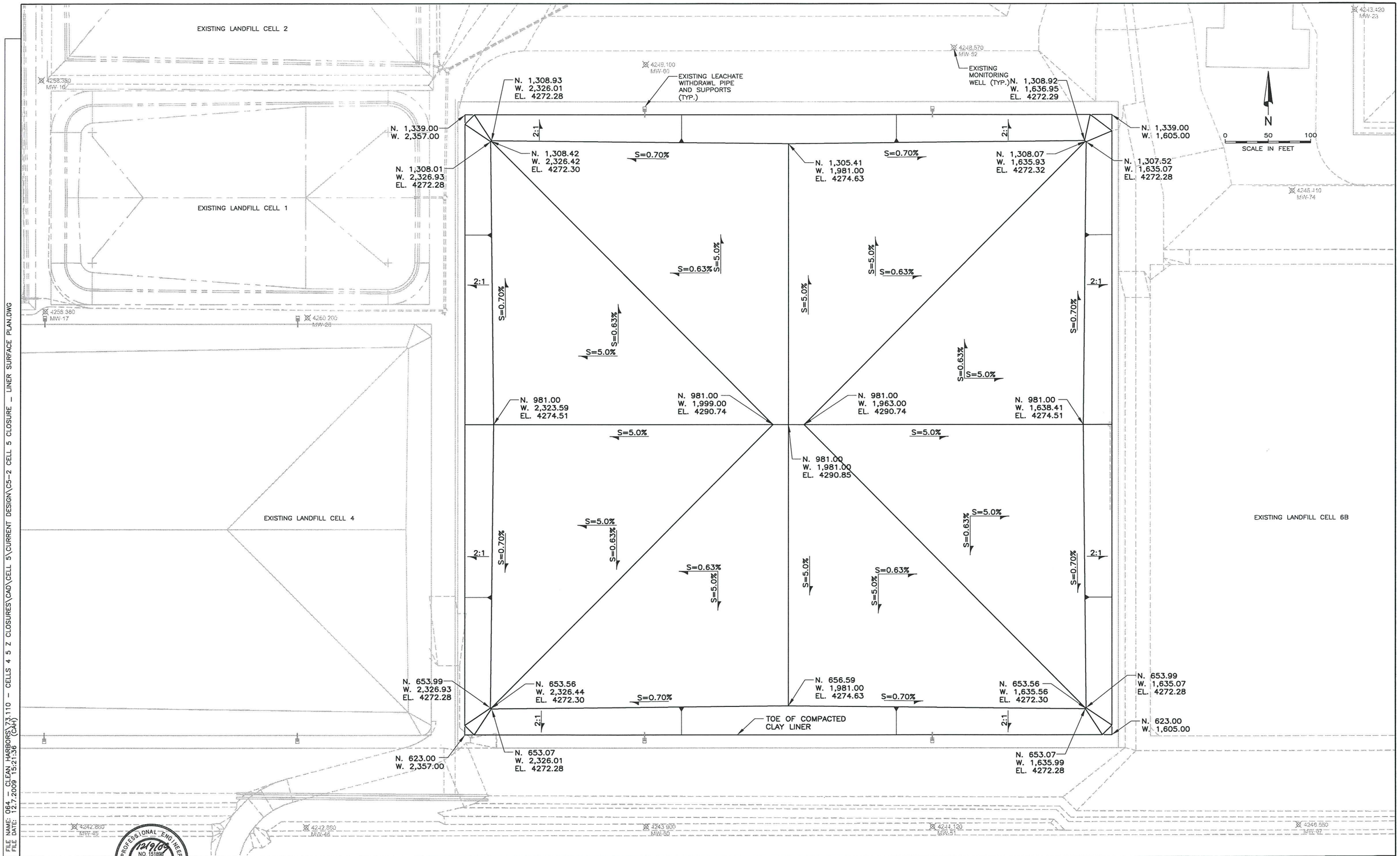

FILE NAME: 064 – CLEAN HARBORS\73.110 – CELLS 4 5 Z CLOSURES\CAD\CELL 5\CURRENT DESIGN\C5-2 CELL 5 CLOSURE – LINER SURFACE PLAN.DWG
FILE DATE: 12.7.2009 15:21:36 (CAH)

HANSEN ALLEN & LUCE ENGINEERS

PROFESSIONAL ENGINEER 12/9/09 NO. 151898 MARVIN E. ALLEN STATE OF UTAH

PROJECT ENGINEER

DESIGNED KCS	3				
DRAFTED CAH	2				
CHECKED MEA	1				
DATE DECEMBER 2009	NO.	DATE	REVISIONS	BY	APVD.

SCALE

CleanHarbors® ENVIRONMENTAL SERVICES, INC.

GRASSY MOUNTAIN FACILITY
LANDFILL CELL 5 – CLOSURE
LINER SURFACE PLAN

SHEET C5-2

64.73.110

10/07

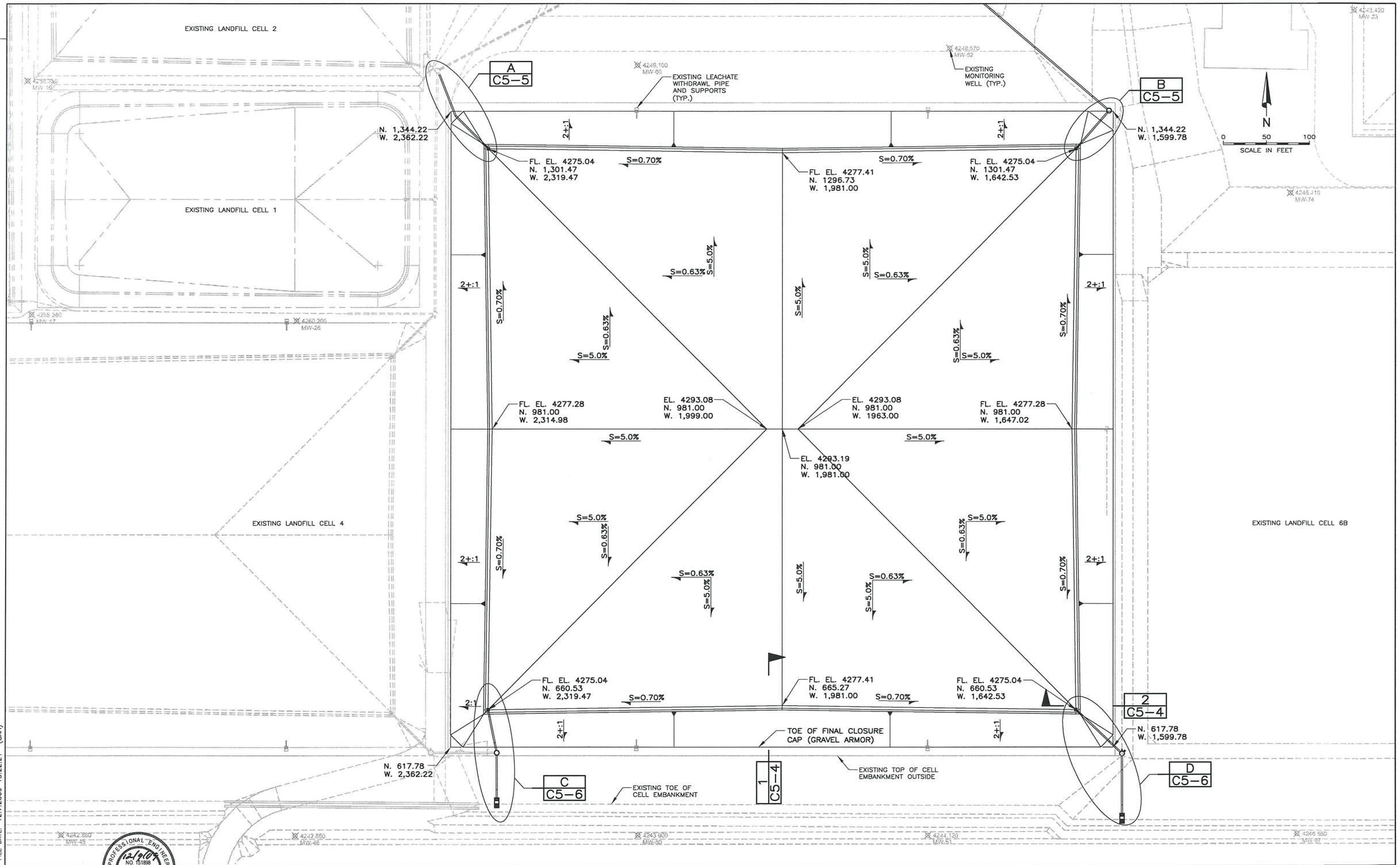

FILE NAME: 064 – CLEAN HARBORS\73.110 – CELLS 4 5 Z CLOSURES\CAD\CELL 5\CURRENT DESIGN\C5-3 CELL 5 CLOSURE _ FINAL CLOSURE PLAN.DWG
FILE DATE: 12.7.2009 15:22:21 (CAH)

10/07 10

HANSEN ALLEN & LUCE ENGINEERS

PROFESSIONAL ENGINEER NO. 151898 MARVIN E. ALLEN STATE OF UTAH 12/9/09

PROJECT ENGINEER

DESIGNED KCS	3					
DRAFTED CAH	2					
CHECKED MEA	1					
DATE DECEMBER 2009	NO.	DATE	REVISIONS	BY	APVD.	

SCALE

CleanHarbors ENVIRONMENTAL SERVICES, INC.

GRASSY MOUNTAIN FACILITY
LANDFILL CELL 5 – CLOSURE
FINAL CLOUSURE PLAN

SHEET C5-3

64.73.110

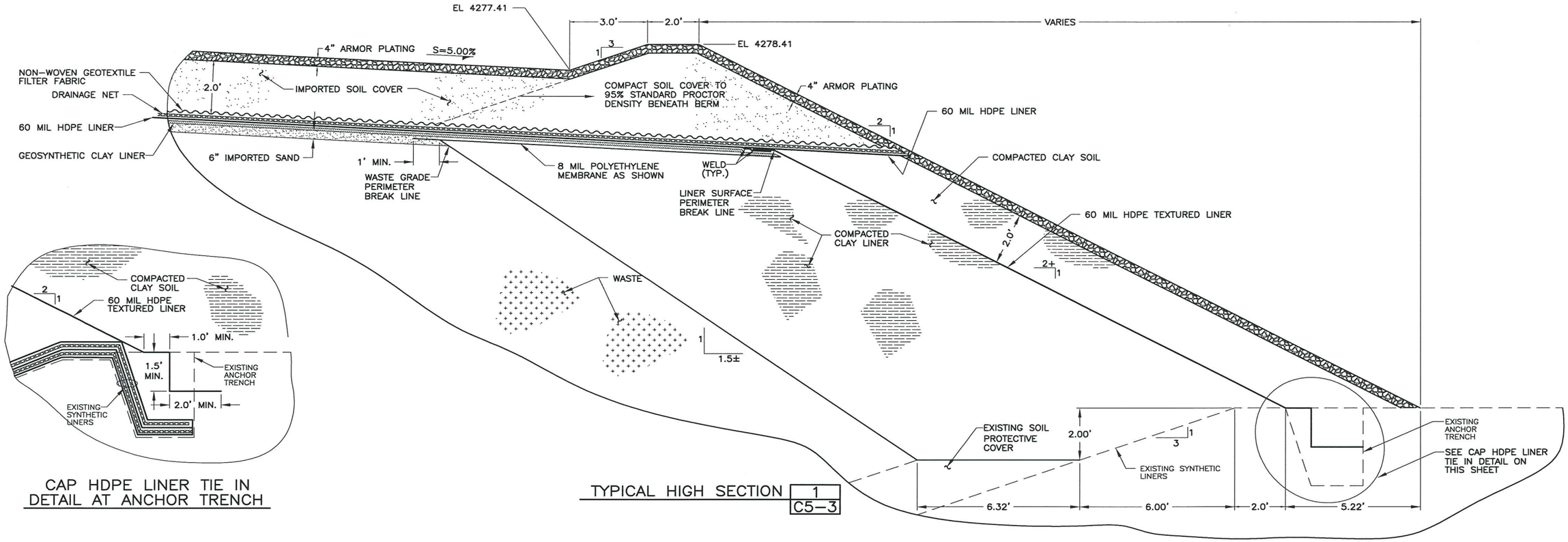

CAP HDPE LINER TIE IN DETAIL AT ANCHOR TRENCH

TYPICAL HIGH SECTION 1 / C5-3

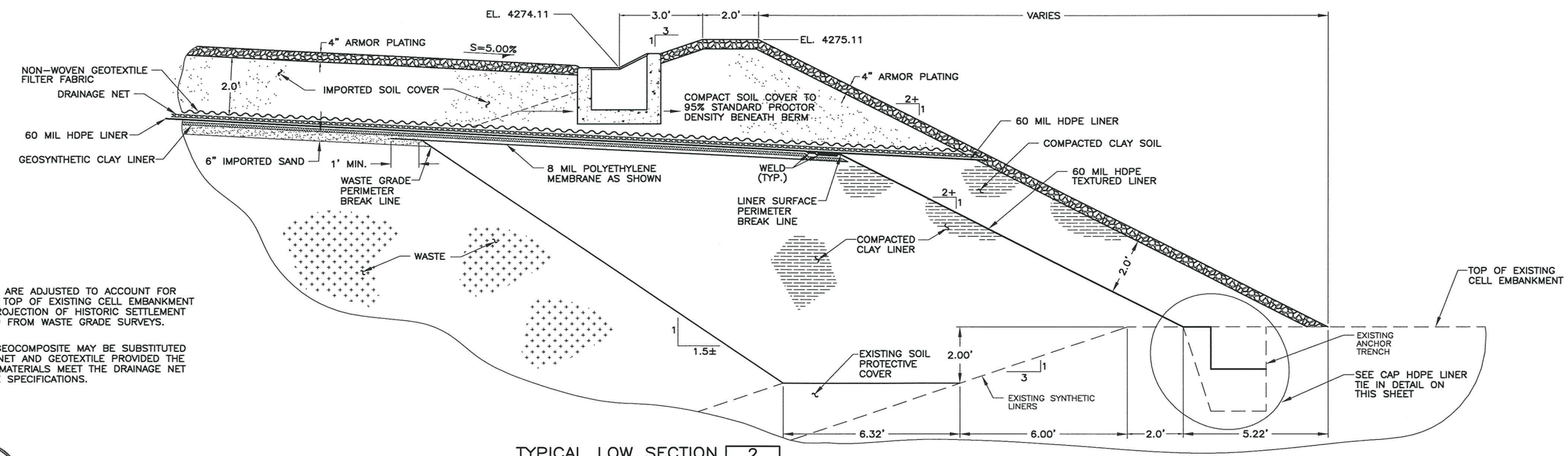

TYPICAL LOW SECTION 2 / C5-3

NOTE:

1. ALL ELEVATIONS ARE ADJUSTED TO ACCOUNT FOR SETTLEMENT OF TOP OF EXISTING CELL EMBANKMENT BASED ON A PROJECTION OF HISTORIC SETTLEMENT RATES OBTAINED FROM WASTE GRADE SURVEYS.
2. SINGLE-SIDED GEOCOMPOSITE MAY BE SUBSTITUTED FOR DRAINAGE NET AND GEOTEXTILE PROVIDED THE GEOCOMPOSITE MATERIALS MEET THE DRAINAGE NET AND GEOTEXTILE SPECIFICATIONS.

FILE NAME: 064 – CLEAN HARBORS\73.110 – CELLS 4 5 Z CLOSURES\CAD\CELL 5\CURRENT DESIGN\C5-4 CELL 5 TYP HIGH LOW SECTIONS.DWG
FILE DATE: 12.7.2009 15:23:02 (CAH)

HANSEN ALLEN & LUCE ENGINEERS

PROFESSIONAL ENGINEER NO. 151898 MARVIN E ALLEN STATE OF UTAH

PROJECT ENGINEER

DESIGNED KCS	3				
DRAFTED CAH	2				
CHECKED MEA	1				
DATE DECEMBER 2009	NO.	DATE	REVISIONS	BY	APVD.

SCALE NOT TO SCALE

CleanHarbors® ENVIRONMENTAL SERVICES, INC.

GRASSY MOUNTAIN FACILITY
LANDFILL CELL 5 – CLOSURE
TYPICAL HIGH–LOW SECTIONS

SHEET C5–4

64.73.110

10/07

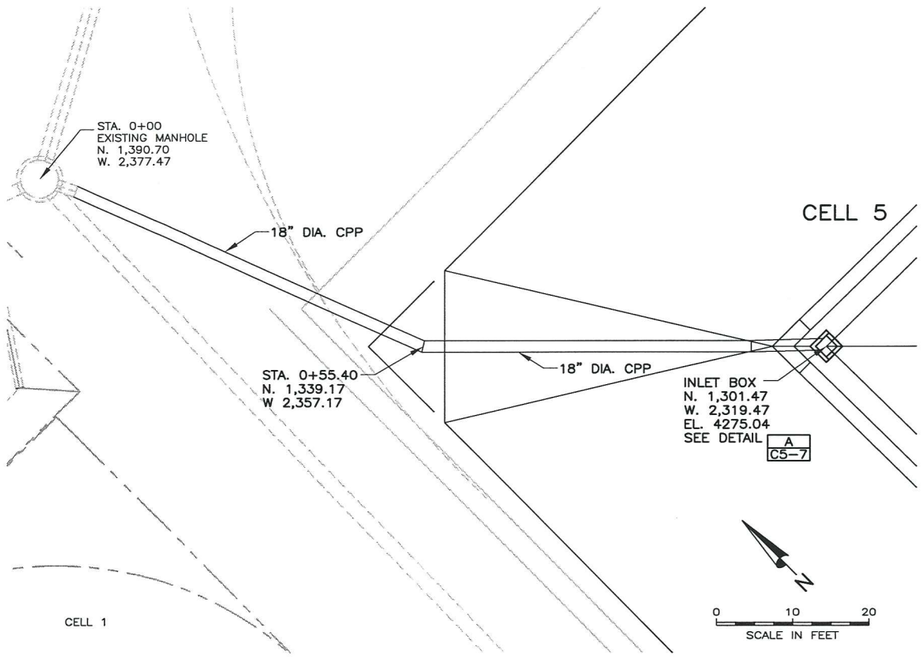

PLAN VIEW

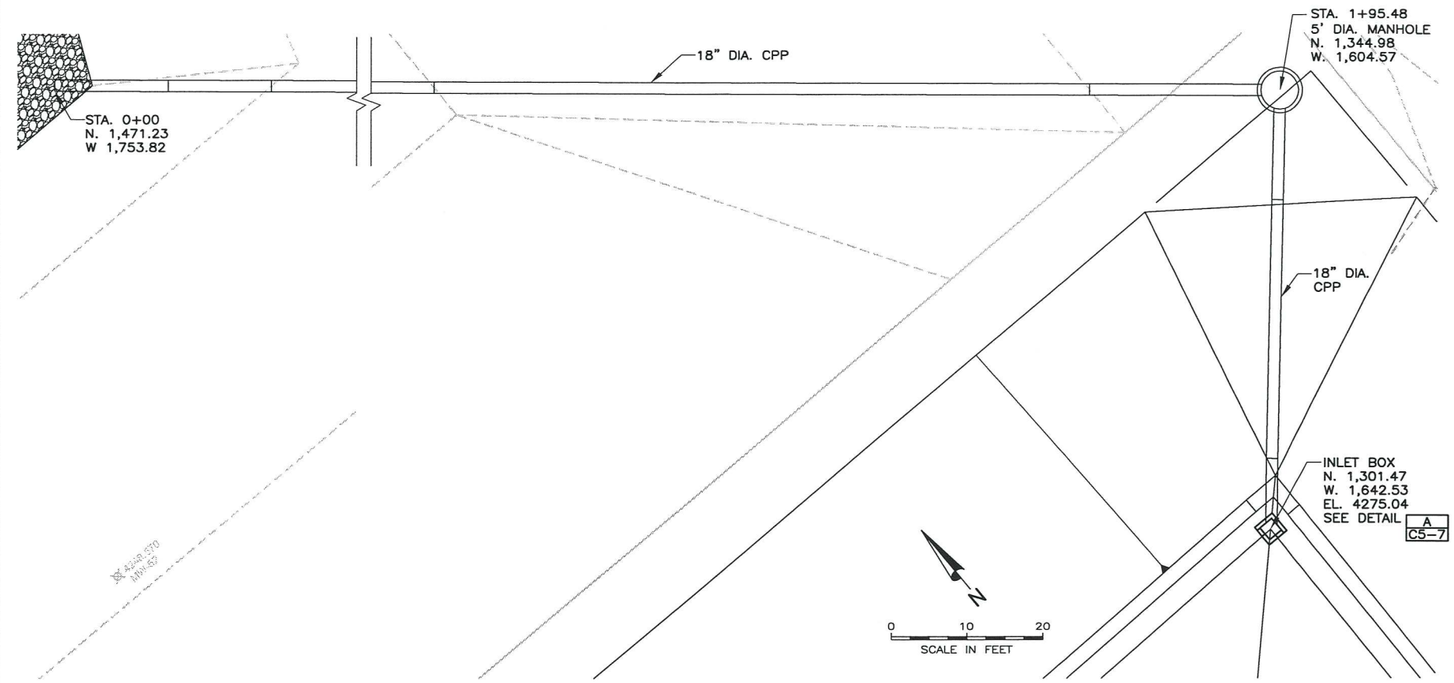

PLAN VIEW

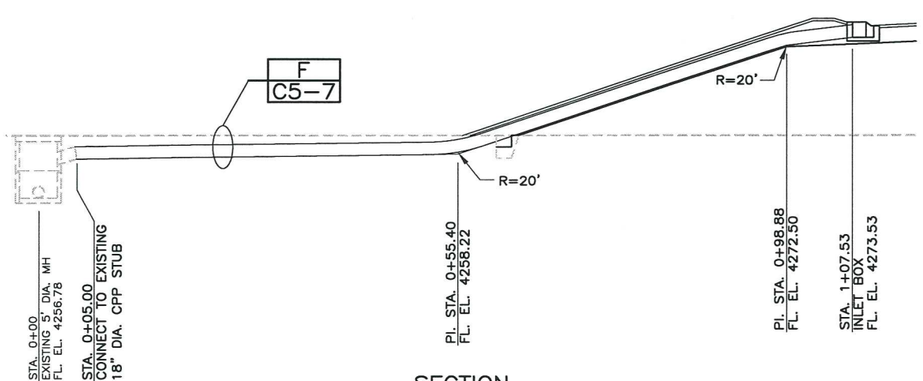

SECTION

NORTHWEST DOWNSPOUT DETAIL A C5-3

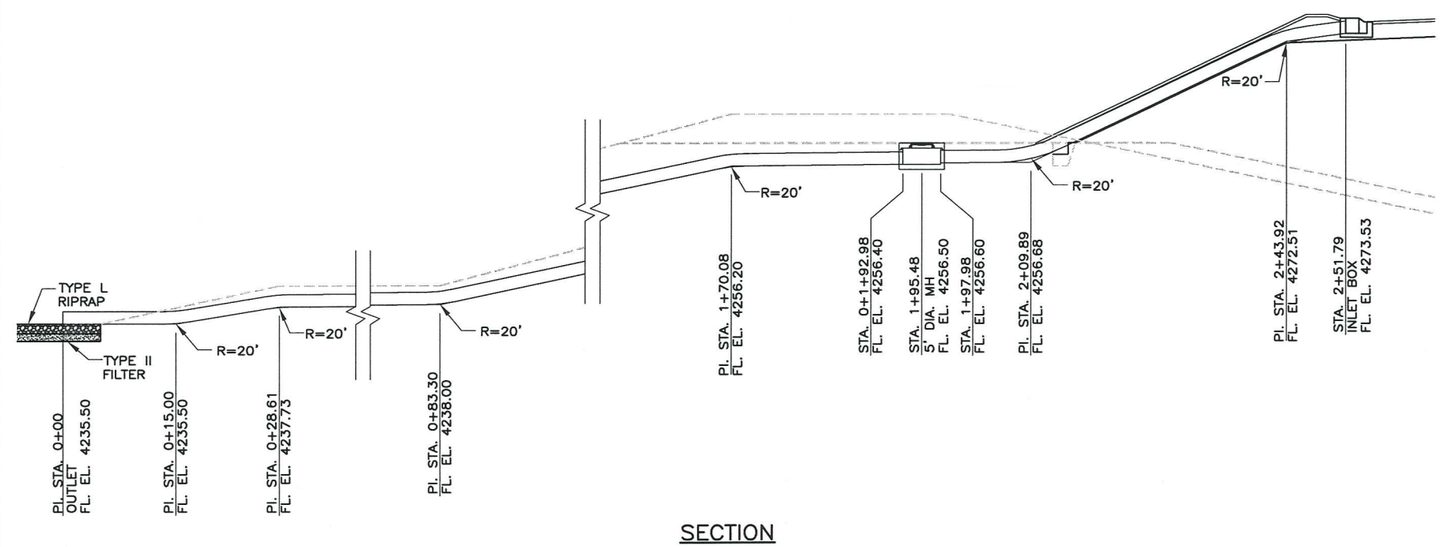

SECTION

NORTHEAST DOWNSPOUT DETAIL B C5-3

FILE NAME: 064 – CLEAN HARBORS\73.110 – CELLS 4 5 Z CLOSURES\CAD\CELL 5\CURRENT DESIGN\C5-5 CELL 5 CLOSURE – NORTH SIDE SECTIONS.DWG
FILE DATE: 12.10.2009 10:48:55 (CAH)

PROFESSIONAL ENGINEER 12/9/09 NO. 151895 MARVIN E. ALLEN STATE OF UTAH

HANSEN ALLEN & LUCE ENGINEERS

DESIGNED KCS	3					
DRAFTED CAH	2					
CHECKED MEA	1					
PROJECT ENGINEER	DATE DECEMBER 2009	NO.	DATE	REVISIONS	BY	APVD.

SCALE

CleanHarbors® ENVIRONMENTAL SERVICES, INC.

GRASSY MOUNTAIN FACILITY
LANDFILL CELL 5 – CLOSURE
DOWNSPOUTS SECTIONS

SHEET C5-5

64.73.110

10/07

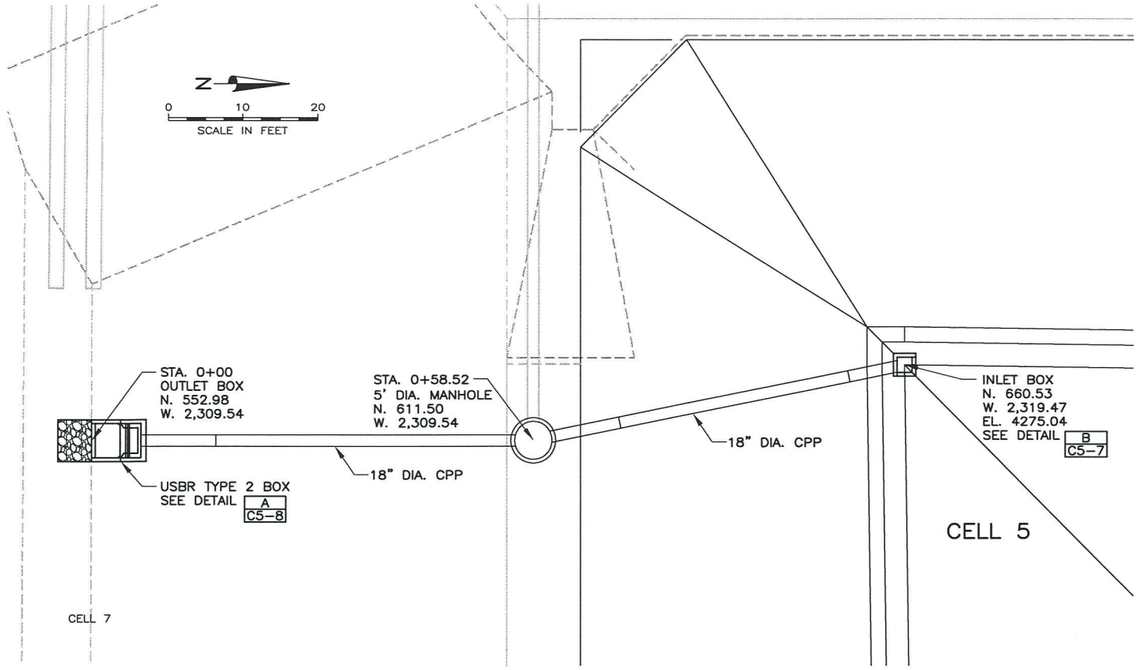

PLAN VIEW

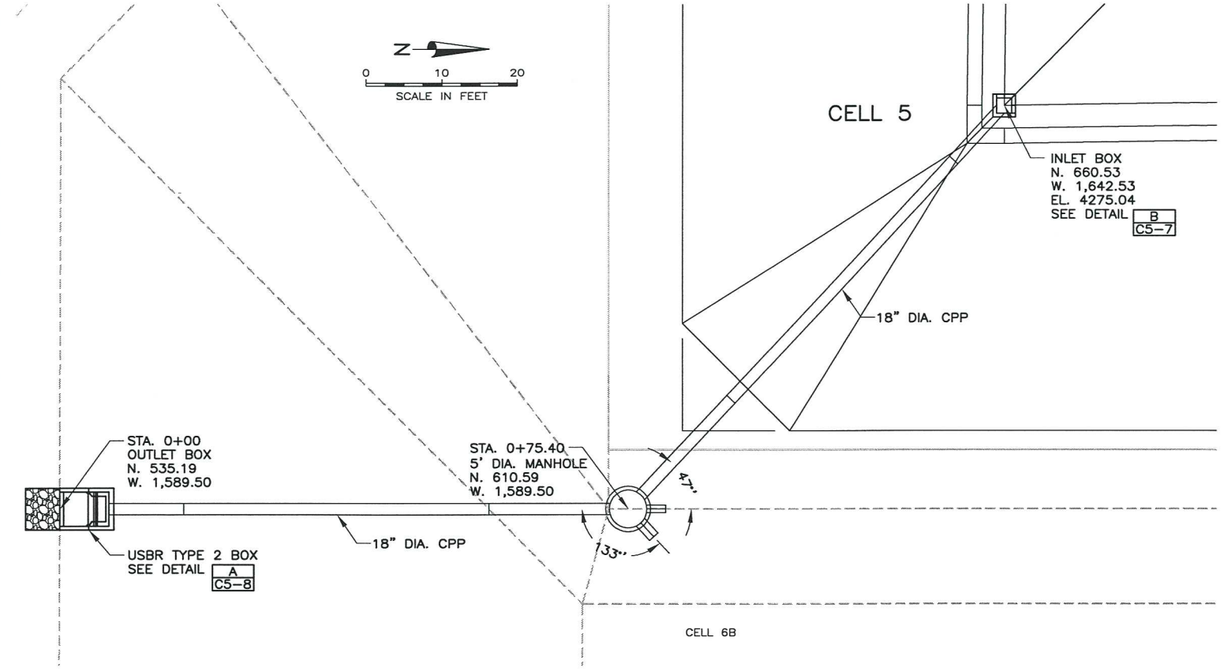

PLAN VIEW

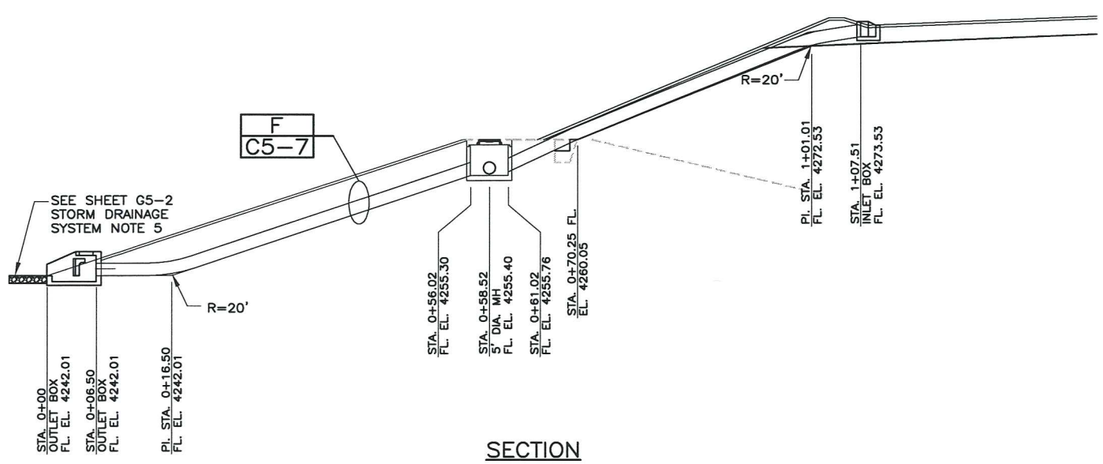

SECTION

SOUTHWEST DOWNSPOUT DETAIL C C5-3

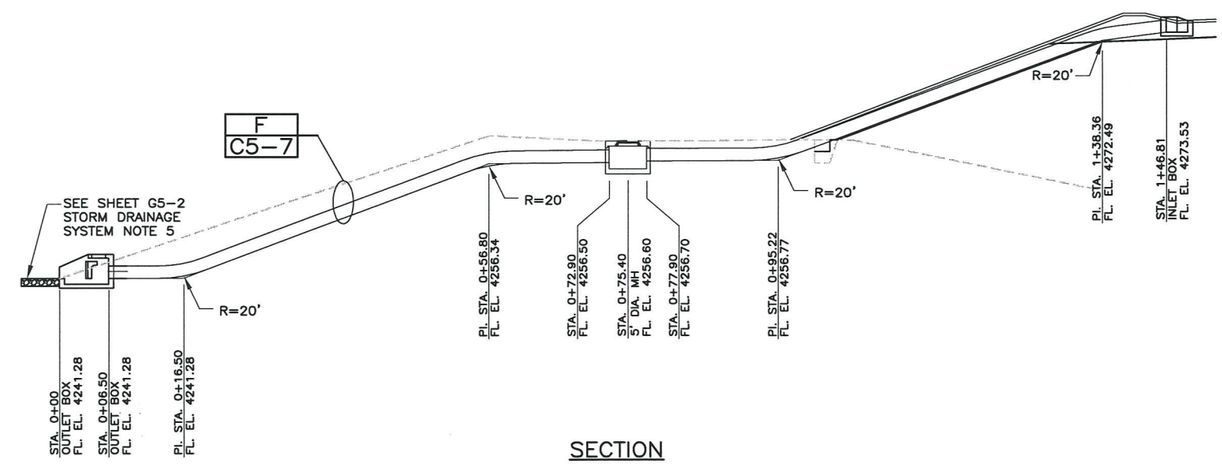

SECTION

SOUTHEAST DOWNSPOUT DETAIL D C5-3

FILE NAME: 064 – CLEAN HARBORS\73.110 – CELLS 4 5 Z CLOSURES\CAD\CELL 5\CURRENT DESIGN\C5-6 CELL 5 CLOSURE – SOUTH SIDE SECTIONS.DWG
FILE DATE: 12.10.2009 10:49:56 (CAH)

HANSEN ALLEN & LUCE ENGINEERS

PROFESSIONAL ENGINEER NO. 151898 MARVIN E. ALLEN STATE OF UTAH

PROJECT ENGINEER

DESIGNED KCS	3				
DRAFTED CAH	2				
CHECKED MEA	1				
DATE DECEMBER 2009	NO.	DATE	REVISIONS	BY	APVD.

SCALE

CleanHarbors® ENVIRONMENTAL SERVICES, INC.

GRASSY MOUNTAIN FACILITY
LANDFILL CELL 5 – CLOSURE
DOWNSPOUTS SECTIONS

SHEET C5-6

64.73.110

10/07

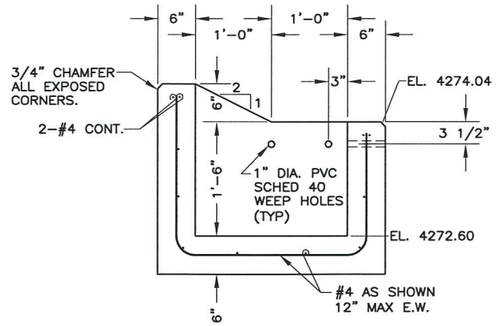

SECTION 1
N.T.S. —

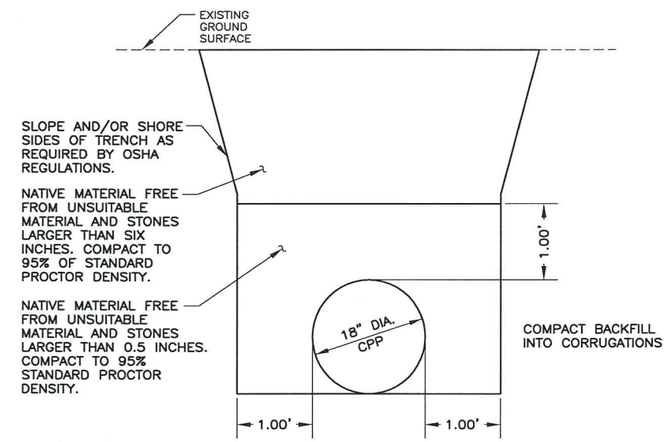

TRENCH DETAIL F C5-5 | F C5-6
N.T.S.

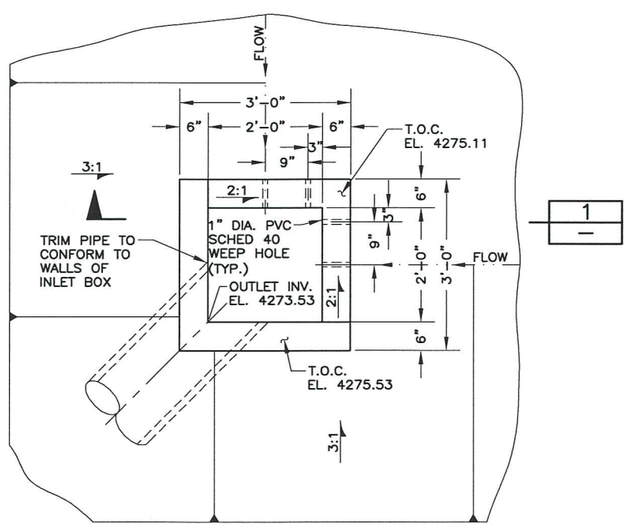

DROP INLET BOX DETAIL A C5-5 | B C5-6
N.T.S.

NOTE:

SOUTHWEST DOWNSPOUT PIPE TO ENTER SIDE OF INLET BOX.

FILE NAME: 064 - CLEAN HARBORS\73.110 - CELLS 4 5 Z CLOSURES\CAD\CELL 5\CURRENT DESIGN\C5-7 CELL 5 CLOSURE - MISCELLANEOUS DETAILS.DWG
FILE DATE: 12.7.2009 15:28:38 (CAH)

HANSEN ALLEN & LUCE INC. ENGINEERS

PROFESSIONAL ENGINEER NO. 151898 MARVIN E ALLEN 12/9/09

PROJECT ENGINEER

DESIGNED KCS	3				
DRAFTED CAH	2				
CHECKED MEA	1				
DATE DECEMBER 2009	NO.	DATE	REVISIONS	BY	APVD.

SCALE NOT TO SCALE

CleanHarbors® ENVIRONMENTAL SERVICES, INC.

GRASSY MOUNTAIN FACILITY
LANDFILL CELL 5 - CLOSURE
MISCELLANEOUS DETAILS

SHEET C5-7
64.73.110

10/07

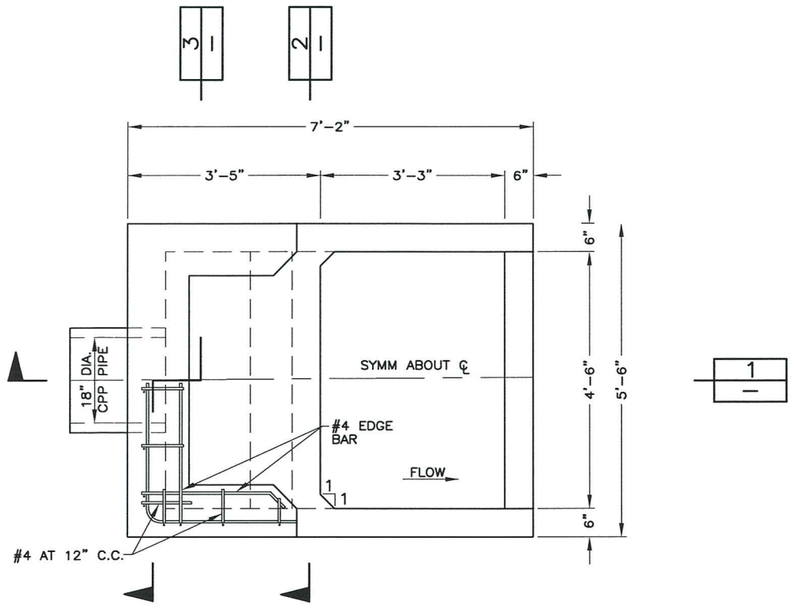

PLAN VIEW

USBR TYPE 2
BAFFLED OUTLET BOX DETAIL A / C5-6

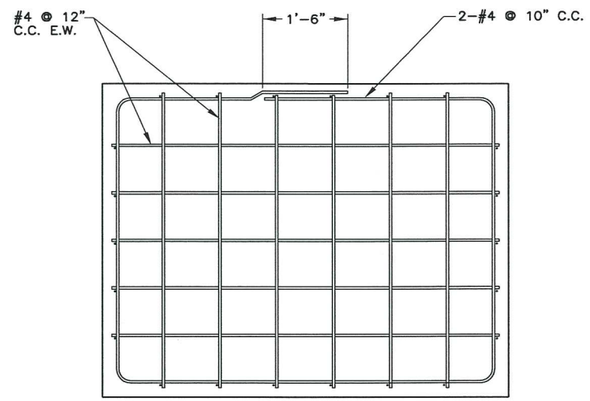

SECTION 4 / —

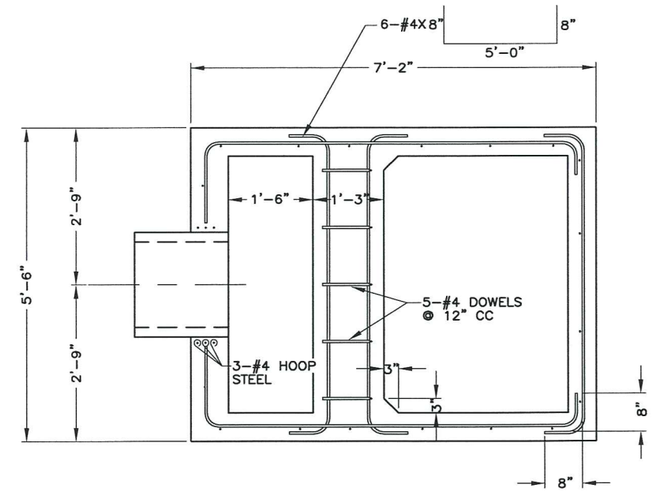

SECTION 5 / —

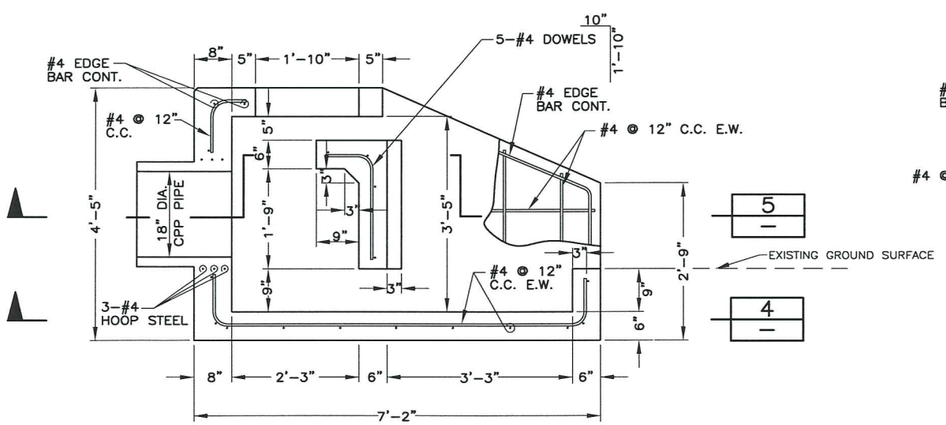

SECTION 1 / —

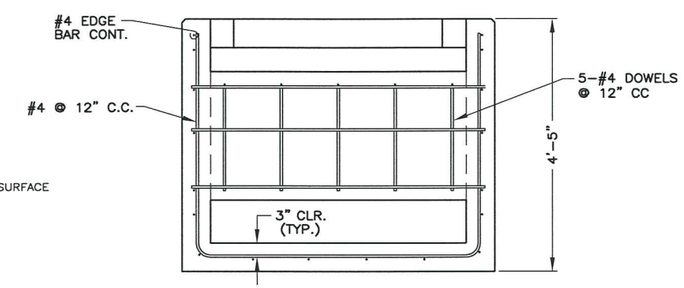

SECTION 2 / —

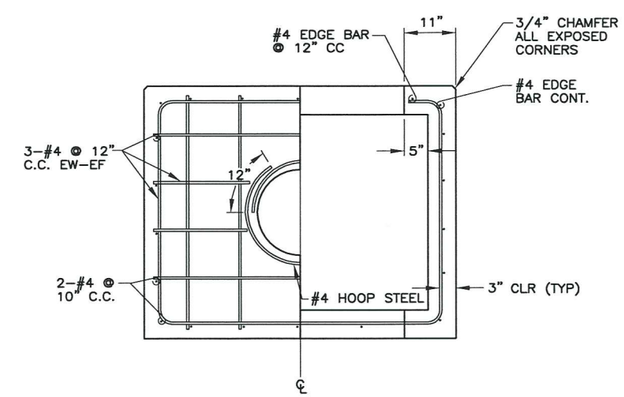

SECTION 3 / —

FILE NAME: 064 - CLEAN HARBORS\73.110 - CELLS 4 5 Z CLOSURES\CAD\CELL 5\CURRENT DESIGN\C5-8 CELL 5 CLOSURE - BAFBOX.DWG
FILE DATE: 12.7.2009 15:29:24 (CAH)

HANSEN ALLEN & LUCE ENGINEERS

PROFESSIONAL ENGINEER 12/9/09 NO. 151898 MARVIN E. ALLEN STATE OF UTAH

PROJECT ENGINEER

DESIGNED KCS	3			
DRAFTED CAH	2			
CHECKED MEA	1			
DATE DECEMBER 2009	NO.	DATE	REVISIONS	BY / APVD.

SCALE: NOT TO SCALE

CleanHarbors® ENVIRONMENTAL SERVICES, INC.

GRASSY MOUNTAIN FACILITY
LANDFILL CELL 5 – CLOSURE
BAFFLED OUTLET BOX

SHEET C5-8
64.73.110

10/07