# ATTACHMENT 12

# AS-BUILT DRAWINGS AND CONSTRUCTION STANDARDS

# APPENDIX A

# AS-BUILT DRAWINGS

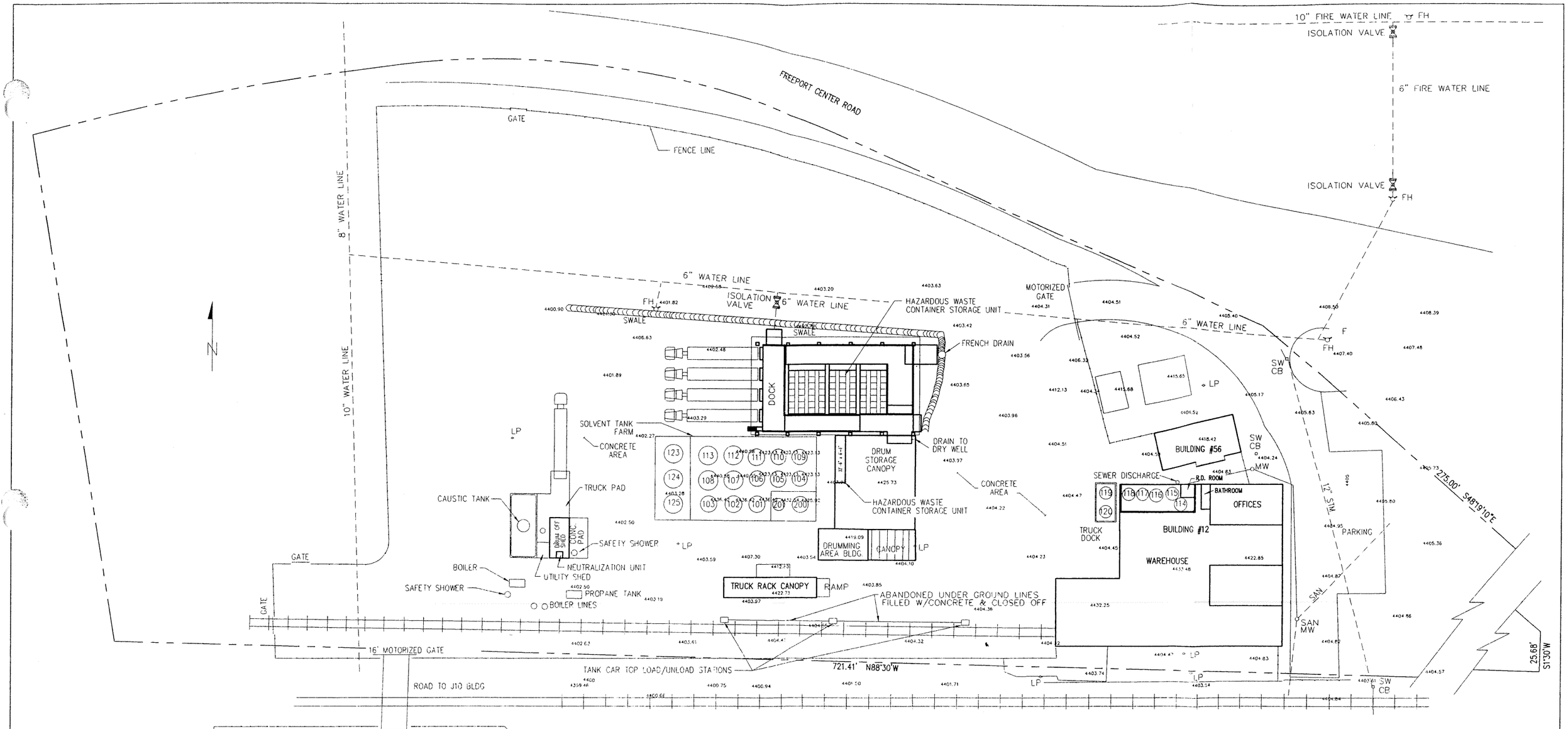


| REV. | DATE | DRN. | CHK'D | REVISIONS DESCRIPTION | APPR. |
|---|---|---|---|---|---|
| 8 | 2-5-07 | W.A.A. | | REVISED PER FIELD INFORMATION AS SUPPLIED BY EH&S | M RITTER |
| 7 | 3-31-95 | FEP | | ADDED TANKS 123-124-125 | |
| 6 | 11-3-92 | RDEN | | REV. DWG #, WAS 7336-CD-001 | |
| 5 | 7-29-92 | FEP | | ADDED DIKE AREA | |
| 4 | 2-17-92 | FEP | | ADDED NEW CAUSTIC TANK & TRUCK PAD | |

ASHLAND

ASHLAND DISTRIBUTION COMPANY

| APPROVED FOR CONST | REV. | LOCATION SALT LAKE CITY, UT. | TITLE |
|---|---|---|---|
| BY | DATE | UNIT-BLDG | CONTOUR PLAN |
| | | DRN. RML | |
| | | DATE 5/26/89 | |
| | | CHK'D NEIL | |
| | | DATE 5/30/89 | DRAWING NO. 7946-CD-001 |
| | | SCALE 1"=30'-0" | REV. 8 |
| | | PLOT 1:360 | |
| PROJ. # E-7946 | | PROJ. TITLE GENERAL PLANT | |

U:\Completed Drawings\Salt Lake City Utah\C\7946-CD-001 CONTOUR PLAN.dwg, 2/6/2007 8:51:33 AM

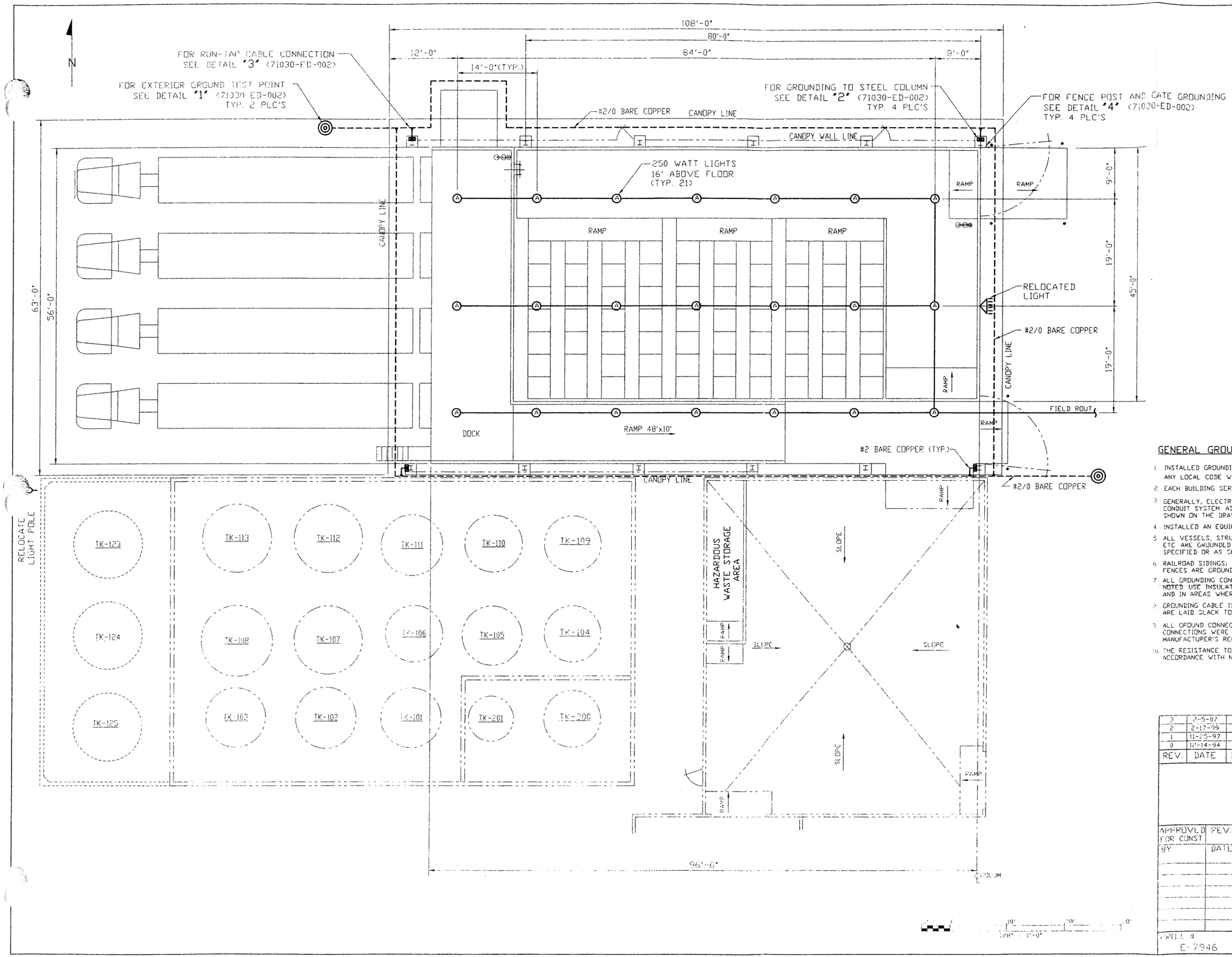


## GENERAL GROUNDING NOTES

1. INSTALLED GROUNDING IN CONFORMANCE WITH THE LATEST NATIONAL ELECTRICAL CODE AND ANY LOCAL CODE WHICH HAS JURISDICTION.
2. EACH BUILDING SERVICE IS GROUNDED AS SHOWN ON THE DRAWINGS.
3. GENERALLY, ELECTRICAL UTILIZATION EQUIPMENT GROUNDING AND BONDING IS VIA THE CONDUIT SYSTEM. ADDITIONAL GROUNDING AND BONDING IS PROVIDED AS SHOWN ON THE DRAWINGS.
4. INSTALLED AN EQUIPMENT GROUNDING CONDUCTOR IN ALL NONMETALLIC CONDUITS.
5. ALL VESSELS, STRUCTURES, SUPPORTS, SWITCHRACKS, MOTOR CONTROL CENTERS, ETC ARE GROUNDED BY CONNECTION TO THE EXISTING SYSTEM, AS SPECIFIED OR AS SHOWN ON THE DRAWINGS.
6. RAILROAD SIDINGS; TRUCK, RAILCAR AND DRUM FILLING AREAS; TANK FARMS; AND FENCES ARE GROUNDED AS SPECIFIED AND AS SHOWN ON THE DRAWINGS.
7. ALL GROUNDING CONDUCTORS ARE BARE STRANDED COPPER UNLESS OTHERWISE NOTED. USE INSULATED CONDUCTORS IN AND UNDERGROUND AT CORROSIVE AREAS AND IN AREAS WHERE CATHODIC PROTECTION SYSTEMS ARE INSTALLED.
8. GROUNDING CABLE IS BURIED AT LEAST 30 INCHES BELOW GRADE. ALL RUNS ARE LAID SLACK TO PREVENT BREAKAGE.
9. ALL GROUND CONNECTIONS ARE UNDERGROUND AND ARE SHOWN ON THE DRAWINGS. ALL CONNECTIONS WERE MADE BY THE EXOTHERMIC WELD PROCESS AND INSTALLED PER THE MANUFACTURER'S RECOMMENDATIONS.
10. THE RESISTANCE TO GROUND OF EACH GROUND ROD ARE 25 OHMS OR LESS IN ACCORDANCE WITH NATIONAL ELECTRICAL CODE REQUIREMENTS.

| REV. | DATE | DRN. | CHK'D | REVISIONS DESCRIPTION | APPR. |
|---|---|---|---|---|---|
| 3 | 2-5-07 | WAA | | REVISED PER FIELD INFORMATION AS SUPPLIED BY CH&M RITTER | |
| 2 | 2-17-99 | JKP | | REMOVED LOOP | |
| 1 | 11-05-97 | JKP | | ADDED FIRE SUPPRESSION BLDG. | |
| 0 | 12-14-94 | JKP | | ISSUED FOR PERMIT | |

ASHLAND.

| APPROVED FOR CONST. | REV. | LOCATION SALT LAKE CITY, UT | TITLE |
|---|---|---|---|
| BY | DATE | UNIT-BLDG | TRUCK DOCK HAZARDOUS WASTE AREA GROUNDING AND LIGHTING PLAN |
| | | DRN. FLP | |
| | | DATE 11-30-94 | |
| | | CHK'D | |
| | | DATE | DRAWING NO. 71030-ED-001 |
| | | SCALE 1/8"=1' | REV. 3 |
| | | PLOT | |
| PROJ. # E-7946 | | PROJ. TITLE GENERAL PLANT | |

U:\Completed Drawings\Salt Lake City Utah\E\71030-ED-001 NEW TRUCK DOCK HAZARDOUS WASTE GROUNDING & LIGHTING PLAN.dwg, 2/6/2007 8:51:31 AM

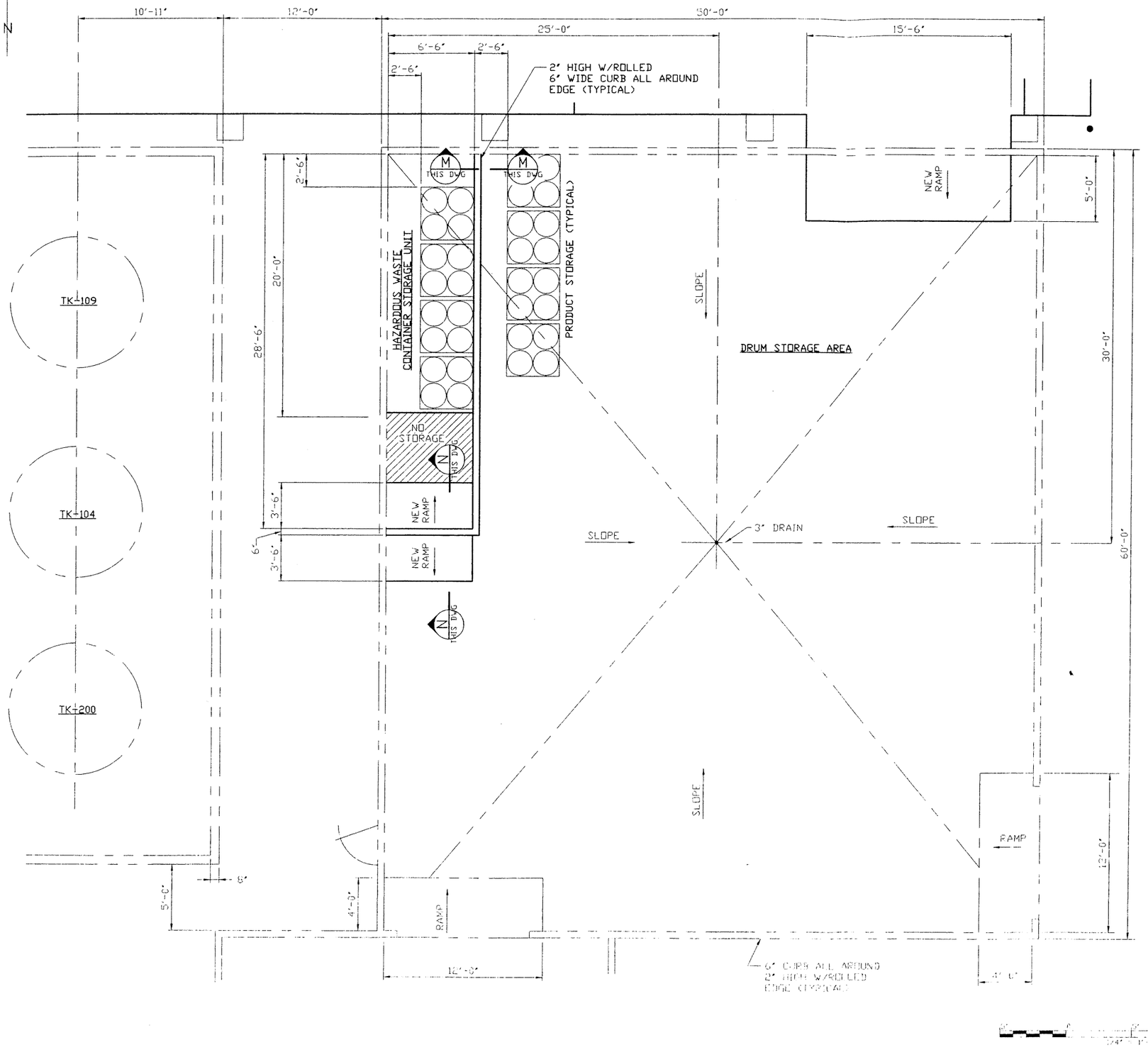


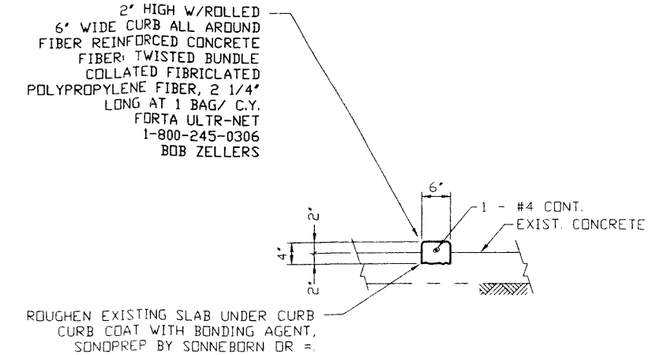


SECTION "M-M" (THIS DWG)

SCALE: NONE

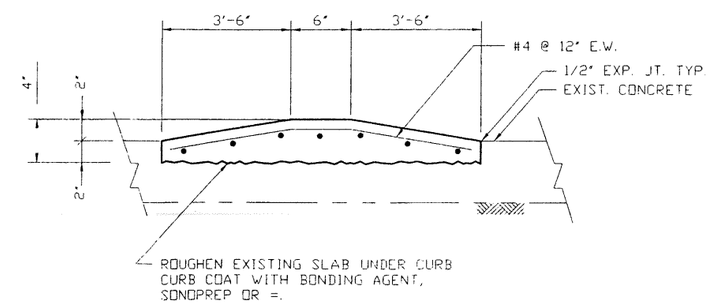


SECTION "N-N" (THIS DWG)

SCALE: NONE

| REV. | DATE | DRN. | CHK'D | REVISIONS DESCRIPTION | APPR. |
|---|---|---|---|---|---|
| 3 | 2-5-07 | WAA | | REVISED PER FIELD INFORMATION AS SUPPLIED BY CHRIS M RITTER | |
| 2 | 6-26-02 | SHAPIRO | | DRAWING NUMBER WAS 71030-CD-003 | |
| 1 | 2-17-98 | FLP | | REMOVED DOOR | |
| 0 | 12-14-94 | FLP | | ISSUED FOR PERMIT | |

ASHLAND.

| | | | | |
|---|---|---|---|---|
| APPROVED FOR CONST BY | REV. DATE | LOCATION SALT LAKE CITY, UT | | TITLE HAZARDOUS WASTE STORAGE AREA CONC. PLAN VIEW |
| | | UNIT-BLDG | | |
| | | DRN. | FLP | |
| | | DATE | 11-17-94 | |
| | | CHK'D | | |
| | | DATE | | DRAWING NO. 71030-CD-003-1 — REV. 3 |
| | | SCALE | 1/4" = 1' | |
| | | PLOT | 1:48 | |
| PROJ. # E-7946 | | PROJ. TITLE GENERAL PLANT | | |

U:\Completed Drawings\Salt Lake City Utah\C\71030-CD-003-1 PROPOSED HAZARDOUS WASTE STORAGE AREA CONCRETE PLAN.dwg, 2/6/2007 8:51:35 AM

# APPENDIX B

# SEALANT SPECIFICATIONS

SIKA CORPORATION
products/systems/services...worldwide

April 28, 1994

Mr. Larry Valentine
**ASHLAND CHEMICAL**
P.O. Box 2219
Columbus, Ohio 43216

RE: Sika Pronto 19, SikaPronto 19 TF
Chemical Resistance

Dear Mr. Valentine:

Please be advised that SikaPronto 19, and SikaPronto 19 TF, when mixed, placed, and cured in accordance with the Sika Technical Data Sheet, are appropriate materials for structurally repairing cracked concrete. SikaPronto 19 and SikaPronto 19TF are solvent-free, high molecular weight methacrylates, that penetrate cracks by gravity and seal concrete substrate surfaces.

In addition, based on strict testing performed by Sika Corporation, 201 Politio Avenue, Lyndhurst NJ 07071, SikaPronto 19 and SikaPronto 19TF demonstrated excellent resistance against the following list of chemicals, after one (1) month of primary contact (material and curing conditions 73°F and 50% R.H.):

**CHEMICALS (75°F test temperature)**
**Sodium Chloride Solution**
**Sodium Hydroxide 30%**
**Cement Water (Saturated)**
**Detergent Solution (5% Ajax)**
**Hydrochloric Acid 10%**
**Sulfuric Acid 10%**
**Oxalic Acid 10%**
**Citric Acid 10%**
**Fuel Oil (Home Heating)**
**Gasoline (Unleaded)**
**Iso-Octane**
**Toluol**
**Silage**
**Synthetic Silage**
**Ethyl Alcohol***
**Zylene 10%**
**MEK 10%**
*** Material destroyed after one (1) month of primary contact.**

Based on these results, it is Sika Corporation's opinion that, SikaPronto 19 and SikaPronto 19TF may provide resistance to the submitted list of materials for intermittent and secondary containment conditions.

*2190 Gladstone Court • Suite A • Glendale Heights, IL 60139 • Phone 708-924-7900 • FAX 708-924-8508*

If I can provide additional information, please contact the Technical Service Department at (800) 933-SIKA or (708) 924-7900.

Sincerely,
SIKA CORPORATION, INC.

Etien O. Frett

Etien O. Frett
Technical Service Representative

cc: Eric Ernst
Todd C. Spindler
Tom Zuppa

ETIEN2/ASHCHM19

# SikaPronto® 19

**... improved, modified-methacrylate**
**... healer/penetrating sealer**

**... Data**

| | |
|---|---|
| **Description:** | SikaPronto 19 is a 2-component, rapid-curing, solvent-free, modified-methacrylate, crack healer/penetrating sealer. |
| **Where to Use:** | Use on grade, above, and below grade on concrete and mortar. SikaPronto 19 structurally repairs cracked concrete; seals surface of concrete from water and chlorides.<br>For horizontal decks, slabs, patios, driveways, parking garages, and other substrates exposed to foot- and pneumatic-tire traffic. |
| **Advantages:** | • Structurally improves concrete surface.<br>• Easy on-site batching - use only complete units.<br>• Does not produce a vapor barrier.<br>• Low viscosity for easy, topical applications and excellent penetration into cracks.<br>• Not flammable.<br>• Low odor.<br>• High bond strength.<br>• Prolongs life of cracked concrete.<br>• Flash point, 'A' Component, is a high, safe-to-work-with 220F.<br>• As a penetrating sealer, SikaPronto 19 reduces water absorption and chloride-ion intrusion. |
| **Coverage:** | 150-200 sq ft/gal for crack healing and surface sealing. Coverage varies with porosity and surface profile of substrate. Higher porosity will reduce coverage.<br>300-400 sq ft/gal when used as a prime coat for SikaPronto 11 concrete and SikaPronto Broadcast. |
| **Packaging:** | 1-gal units, 4/ctn; 4.5-gal units. |

**Typical Data for SikaPronto 19:**
(Material and curing conditions @ 73F and 50% R.H.)

| | |
|---|---|
| **Shelf Life:** | 1 year in original, unopened containers. |
| **Storage Conditions:** | Store dry at 40-80F. Condition material to 65-75F before using. Storage at higher temperatures will reduce shelf life. |
| **Color:** | Light purple when liquid; light amber after cure. |
| **Mixing Ratio:** | Plant-proportioned kit; mix entire unit. |
| **Methacrylate Monomer Viscosity:** | 25 cps maximum |
| **Pot Life:** | Approximately 20 minutes. |

**Compressive Properties (ASTM D-695):**
**Compressive Strength, psi**

| | 40F* | 73F* | 90F* |
|---|---|---|---|
| 1 hour | - | 1,000 | 1,900 |
| 2 hour | - | 2,700 | 2,300 |
| 1 day | 1,800 | 3,500 | 2,900 |
| 7 day | 3,500 | 4,300 | 3,100 |

**Flexural Properties (ASTM D-790):**
1 day - Flexural Strength - (Modulus of Rupture) 2,500 psi

**Bond Strength (ASTM C-882):**
**(Hardened concrete to hardened concrete)**

| | | |
|---|---|---|
| 2 day (dry cure)- | Bond Strength - | 2,100 psi |
| 14 day (moist cure) - | Bond Strength - | 2,300 psi |

*Material cured and tested at the temperatures indicated.