ATTACHMENT 22

SMALL CALIBER DISASSEMBLY LINE DRAWINGS

Buildings 1325 and 1335

Attachment 22
Small Caliber Disassembly Line Drawings

number	date	title
Building 1325		
		Small Caliber Disassembly Line Flow Chart
	10-Apr-03	Small Caliber Disassembly Line Layout
EED-0283	25-Mar-95	Small Caliber Disassembly Line Electrical Layout
EED-0284	25-Mar-95	Small Caliber Disassembly Line Pneumatic Layout
Building 1335		
22711335-EVR 1 of 8	5-Jan-15	APE 2271 SPAM / APE 1336 Vacuum System Building 1335 Layout
22711335-EVR 2 of 8	5-Jan-15	APE 2271 SPAM SPAM Layout
22711283-EVR 3 of 8	5-Jan-15	APE 1336 Vacuum System Vacuum System Layout
22711283-EVR 4 of 8	5-Jan-15	APE 2271 SPAM / APE 1336 Vacuum System Flow Chart
22711283-EVR 5 of 8	5-Jan-15	APE 2271 SPAM Electrical Layout
22711283-EVR 6 of 8	5-Jan-15	APE 2271 SPAM Pneumatic Layout
22711283-EVR 7 of 8	5-Jan-15	APE 1336 Vacuum System Electrical Layout
22711283-EVR 8 of 8	5-Jan-15	APE 1336 Vacuum System Pneumatic Layout

FLOW CHART FOR MUNITIONS VIA A CONVEYOR CHAIN

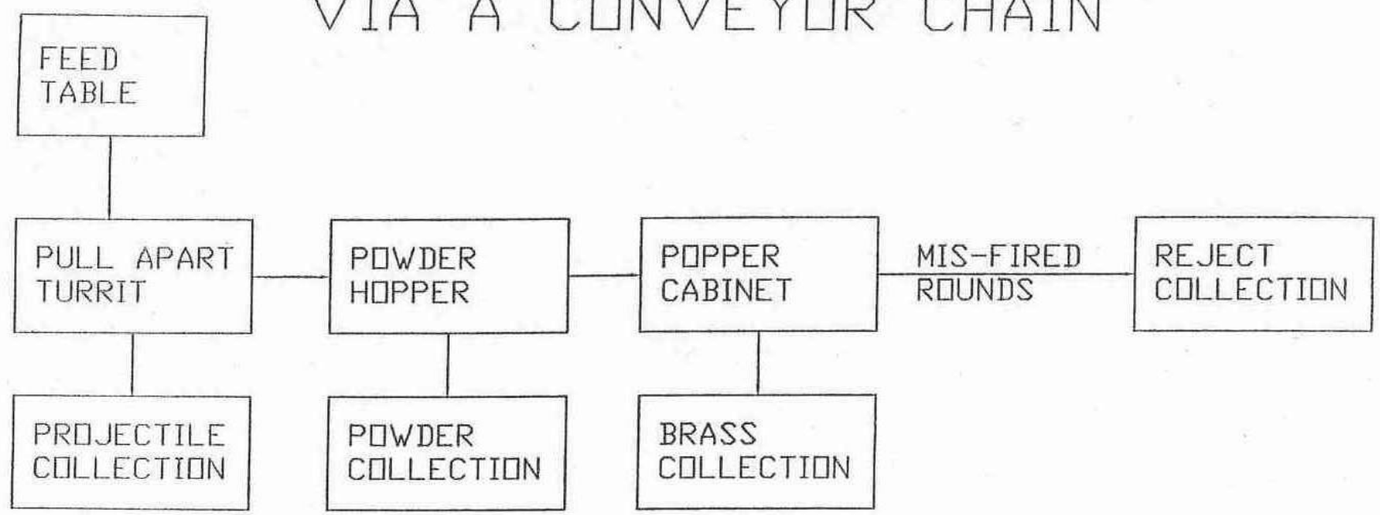

PRIMER GAS STREAM

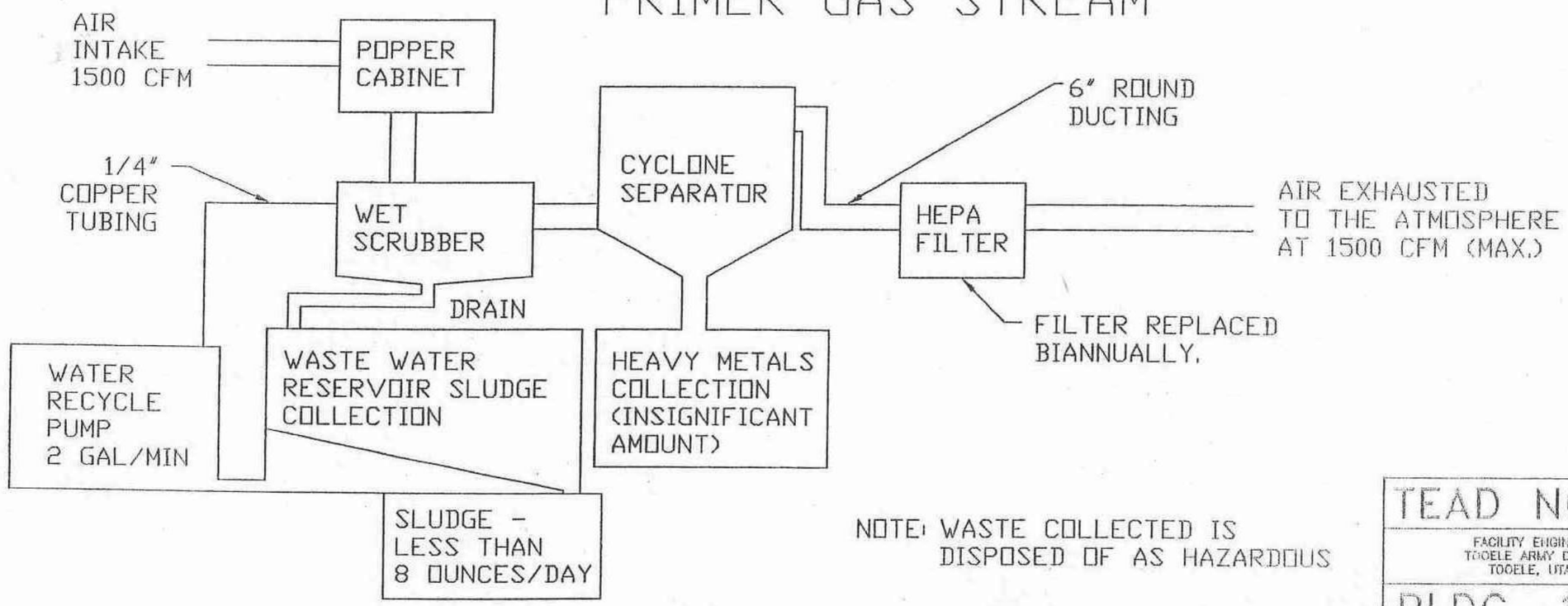

NOTE: WASTE COLLECTED IS DISPOSED OF AS HAZARDOUS

TEAD NORTH

FACILITY ENGINEER
TOOELE ARMY DEPOT
TOOELE, UTAH

BLDG. 1325

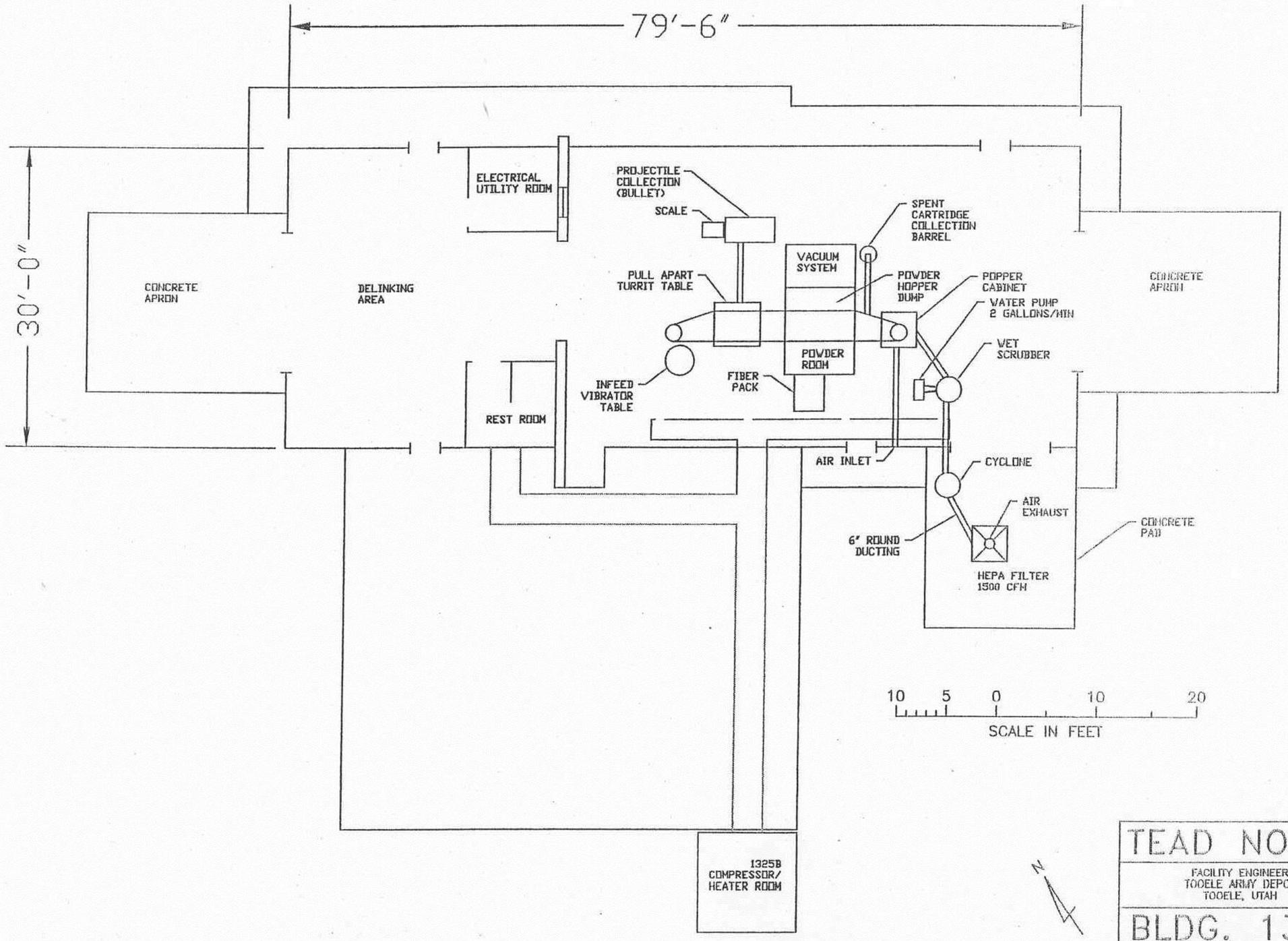
79'-6"
30'-0"
ELECTRICAL UTILITY ROOM
PROJECTILE COLLECTION (BULLET)
SCALE
SPENT CARTRIDGE COLLECTION BARREL
VACUUM SYSTEM
PULL APART TURRIT TABLE
POWDER HOPPER DUMP
POPPER CABINET
WATER PUMP 2 GALLONS/MIN
CONCRETE APRON
DELINKING AREA
CONCRETE APRON
WET SCRUBBER
POWDER ROOM
INFEED VIBRATOR TABLE
FIBER PACK
REST ROOM
VIBRATOR TABLE
AIR INLET
CYCLONE
AIR EXHAUST
CONCRETE PAD
6" ROUND DUCTING
HEPA FILTER 1500 CFM
10 5 0 10 20
SCALE IN FEET
1325B COMPRESSOR/ HEATER ROOM
N
TEAD NORTH
FACILITY ENGINEER
TOOELE ARMY DEPOT
TOOELE, UTAH
BLDG. 1325
DATE: APRIL 10, 2003

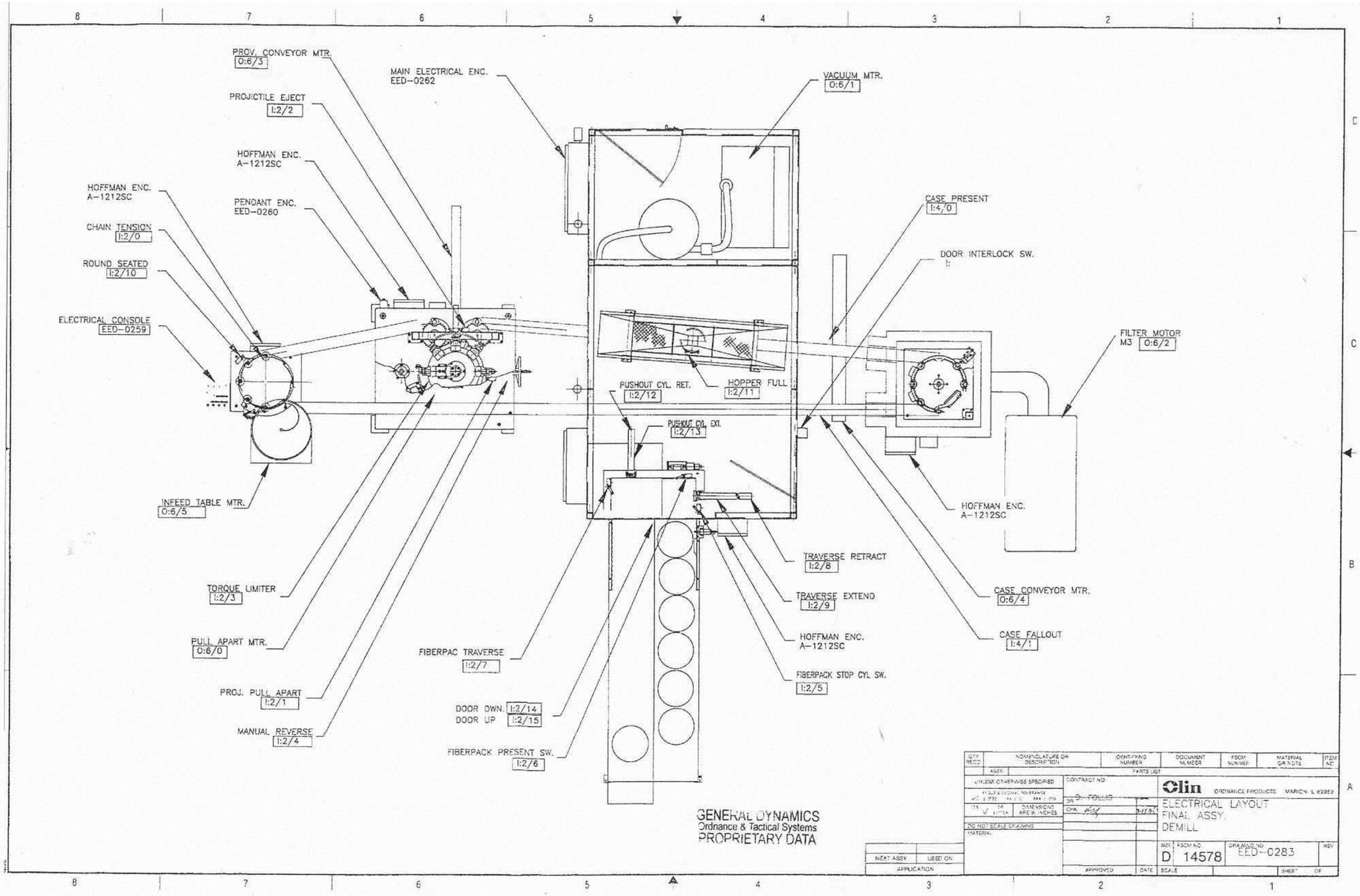
PROV. CONVEYOR MTR. O:6/3
MAIN ELECTRICAL ENC. EED-0262
VACUUM MTR. O:6/1
PROJICTILE EJECT I:2/2
HOFFMAN ENC. A-1212SC
HOFFMAN ENC. A-1212SC
PENDANT ENC. EED-0260
CHAIN TENSION I:2/0
ROUND SEATED I:2/10
ELECTRICAL CONSOLE EED-0259
CASE PRESENT I:4/0
DOOR INTERLOCK SW. I:
FILTER MOTOR M3 O:6/2
PUSHOUT CYL. RET. I:2/12
HOPPER FULL I:2/11
PUSHOUT CYL. EXT. I:2/13
INFEED TABLE MTR. O:6/5
HOFFMAN ENC. A-1212SC
TRAVERSE RETRACT I:2/8
TORQUE LIMITER I:2/3
TRAVERSE EXTEND I:2/9
CASE CONVEYOR MTR. O:6/4
PULL APART MTR. O:6/0
HOFFMAN ENC. A-1212SC
CASE FALLOUT I:4/1
FIBERPAC TRAVERSE I:2/7
FIBERPACK STOP CYL SW. I:2/5
PROJ. PULL APART I:2/1
DOOR DWN. I:2/14
DOOR UP I:2/15
MANUAL REVERSE I:2/4
FIBERPACK PRESENT SW. I:2/6
GENERAL DYNAMICS
Ordnance & Tactical Systems
PROPRIETARY DATA
QTY REQD
NOMENCLATURE OR DESCRIPTION
IDENTIFYING NUMBER
DOCUMENT NUMBER
FSCM NUMBER
MATERIAL OR NOTE
ITEM NO
ASSY.
PARTS LIST
UNLESS OTHERWISE SPECIFIED
CONTRACT NO.
DR D. FOLLIS
CHK.
DIMENSIONS ARE IN INCHES
DO NOT SCALE DRAWING
MATERIAL
Olin ORDNANCE PRODUCTS MARION, IL 62959
ELECTRICAL LAYOUT
FINAL ASSY.
DEMILL
NEXT ASSY
USED ON
APPLICATION
APPROVED
DATE
SIZE D
FSCM NO 14578
DRAWING NO EED-0283
REV
SCALE
SHEET OF

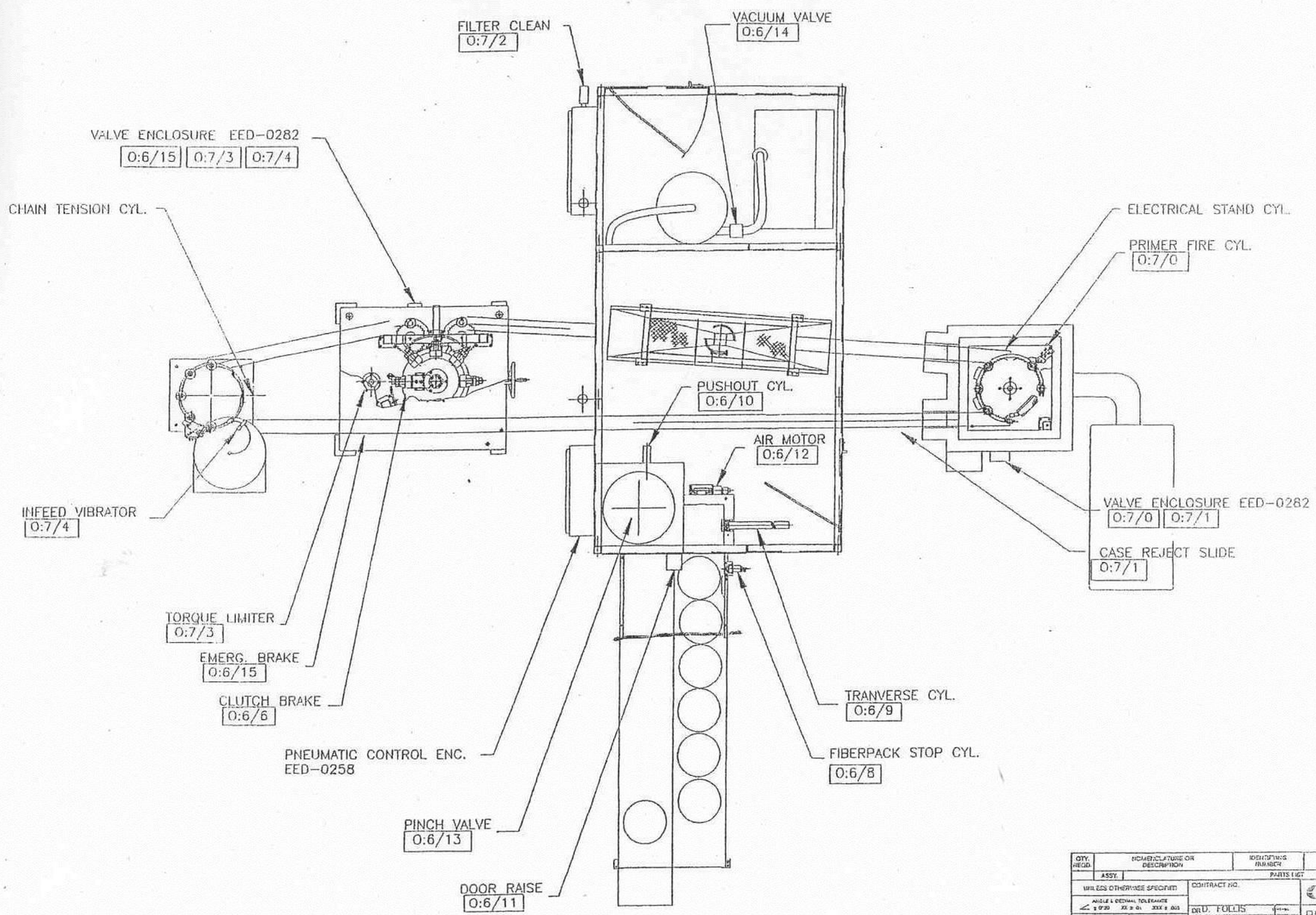

GENERAL DYNAMICS
Ordnance & Tactical Systems
PROPRIETARY DATA

QTY. REQD	NOMENCLATURE OR DESCRIPTION	IDENTIFYING NUMBER	DOCUMENT NUMBER	FSCM NUMBER	MATERIAL OR NOTE	ITEM NO.
ASSY.	PARTS LIST					

UNLESS OTHERWISE SPECIFIED — CONTRACT NO.

ANGLE & DECIMAL TOLERANCE ∠ ± 0°30' .XX ± .01 .XXX ± .005

125 √ OR BETTER — DIMENSIONS ARE IN INCHES

DO NOT SCALE DRAWING

MATERIAL

DR D. FOLLIS

CHK

Olin ORDNANCE PRODUCTS MARION, IL 62959

PNEUMATIC LAYOUT
PULL APART MACHINE
DEMILL

SIZE	FSCM NO	DRAWING NO.	REV
D	14578	EED-0284	

NEXT ASSY	USED ON
APPLICATION	

APPROVED — DATE — SCALE — SHEET OF

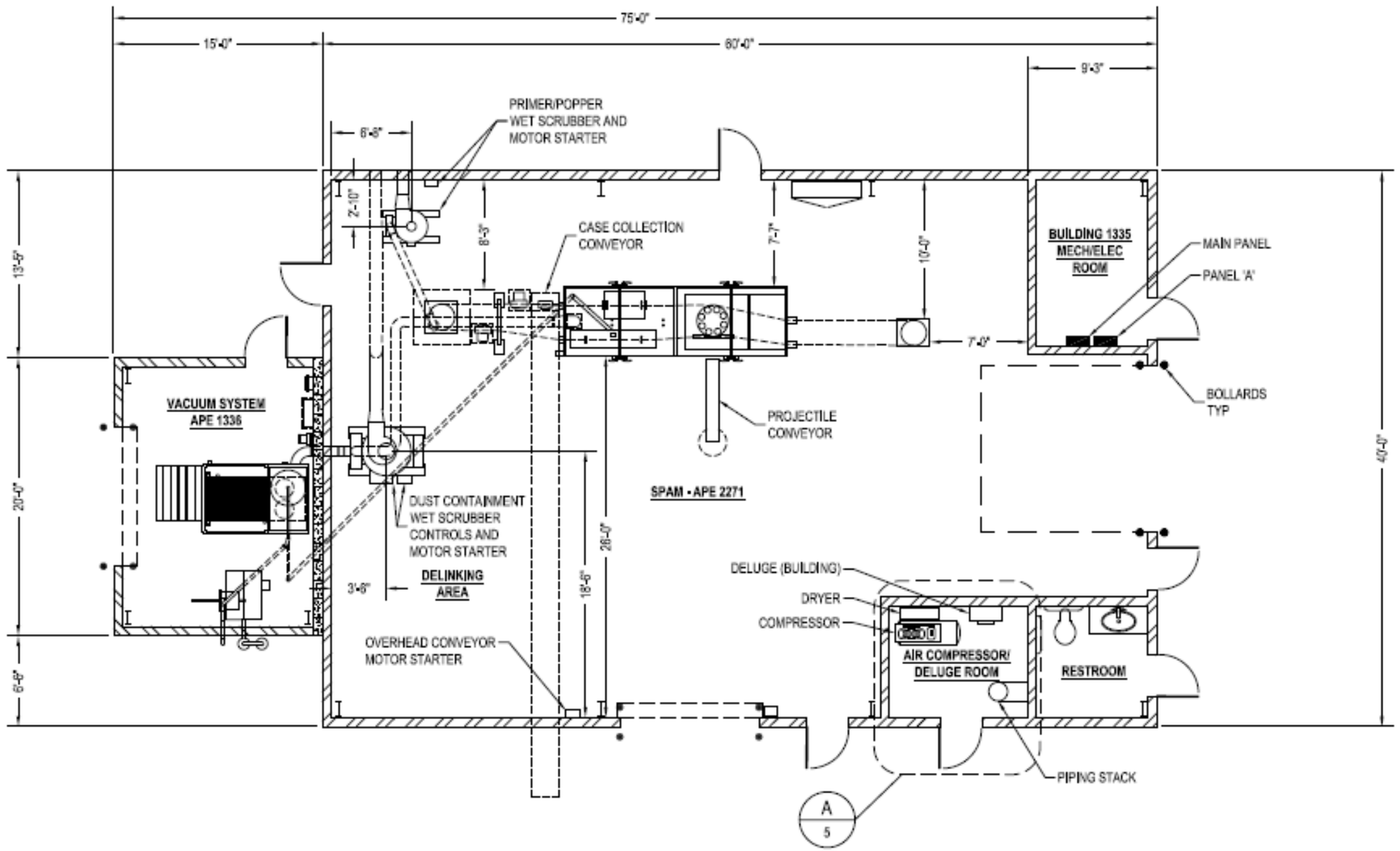

PROJ MGR: MICHAEL HOUSER	UNLESS OTHERWISE NOTED ALL DIMENSIONS ARE IN INCHES DO NOT SCALE DRAWING	US ARMY **TOOELE ARMY DEPOT** AMMUNITION EQUIPMENT DIRECTORATE	
AED	TOLERANCES DECIMAL 2 PLACES ± .01 3 PLACES ± .005 FRACTIONAL ± 1/64 ANGULAR ± 0° 30' BREAK SHARP EDGES AND CORNERS	APE 2271 SPAM / APE 1336 VACUUM SYSTEM **BUILDING 1335 LAYOUT** FLOOR PLAN	
SAFETY			
FINAL			
NEXT ASSEMBLY	CHECKED BY: DON FANNING	SIZE: B / CAGE NO: 21624	DWG NO: 22711335-EVR / MOD
	DRAWN BY: K HENSLEY	DATE: 1/05/2015	SCALE: 1/8" = 1'-0" / SHT: 1 OF 8

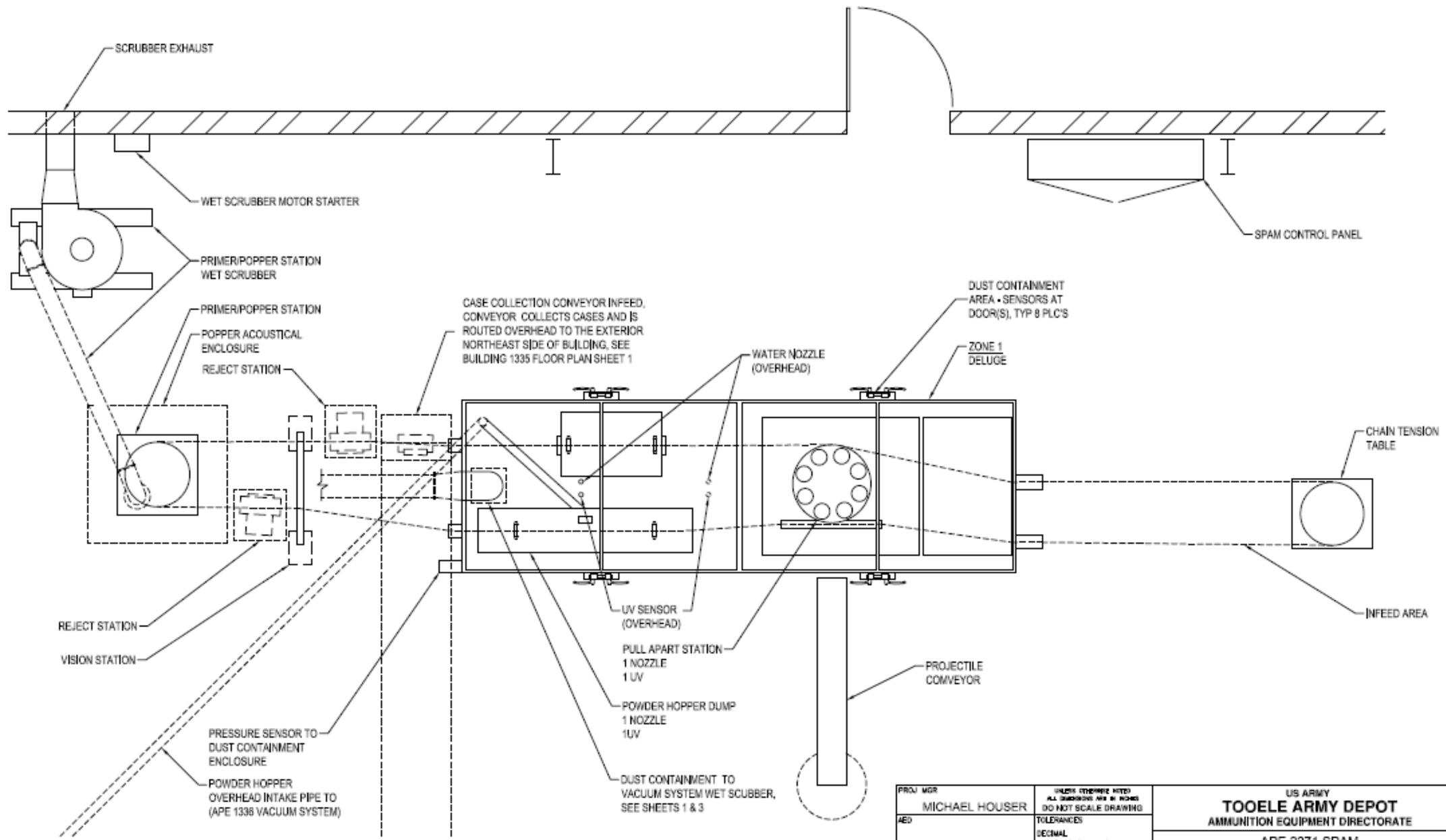

PROJ MGR: MICHAEL HOUSER	UNLESS OTHERWISE NOTED ALL DIMENSIONS ARE IN INCHES DO NOT SCALE DRAWING	US ARMY TOOELE ARMY DEPOT AMMUNITION EQUIPMENT DIRECTORATE			
AED	TOLERANCES DECIMAL 2 PLACES ± .01 3 PLACES ± .005 FRACTIONAL ± 1/64 ANGULAR ± 0° 30' BREAK SHARP EDGES AND CORNERS	APE 2271 SPAM SPAM LAYOUT FLOOR PLAN			
SAFETY					
FINAL					
NEXT ASSEMBLY: 22711335-EVR SHT 1	CHECKED BY: DON FANNING	SIZE: B	CAGE NO: 21624	DWG NO: 22711335-EVR	MOD
	DRAWN BY: K HENSLEY	DATE: 1/05/2015	SCALE: 3/8" = 1'-0"	SHT: 2 OF 8	

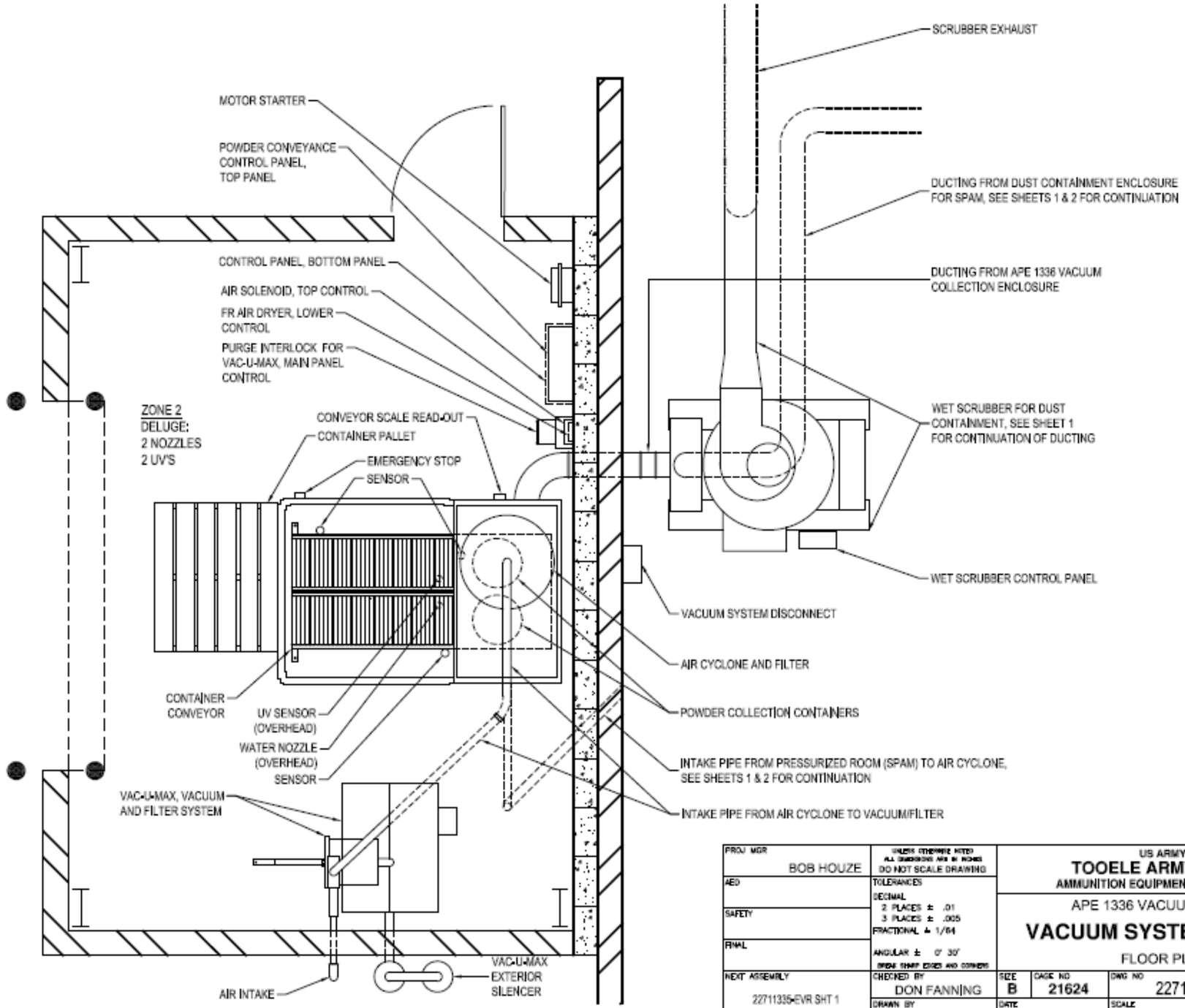

PROJ MGR: BOB HOUZE	UNLESS OTHERWISE NOTED ALL DIMENSIONS ARE IN INCHES DO NOT SCALE DRAWING	US ARMY TOOELE ARMY DEPOT AMMUNITION EQUIPMENT DIRECTORATE			
AED	TOLERANCES DECIMAL 2 PLACES ± .01 3 PLACES ± .005 FRACTIONAL ± 1/64 ANGULAR ± 0° 30' BREAK SHARP EDGES AND CORNERS	APE 1336 VACUUM SYSTEM			
SAFETY		VACUUM SYSTEM LAYOUT			
FINAL		FLOOR PLAN			
NEXT ASSEMBLY: 22711335-EVR SHT 1	CHECKED BY: DON FANNING	SIZE: B	CAGE NO: 21624	DWG NO: 22711335-EVR	MOD
	DRAWN BY: K HENSLEY	DATE: 1/05/2015	SCALE: 3/8" = 1'-0"	SHT: 3 OF 8	

MUNITIONS VIA CONVEYOR CHAIN

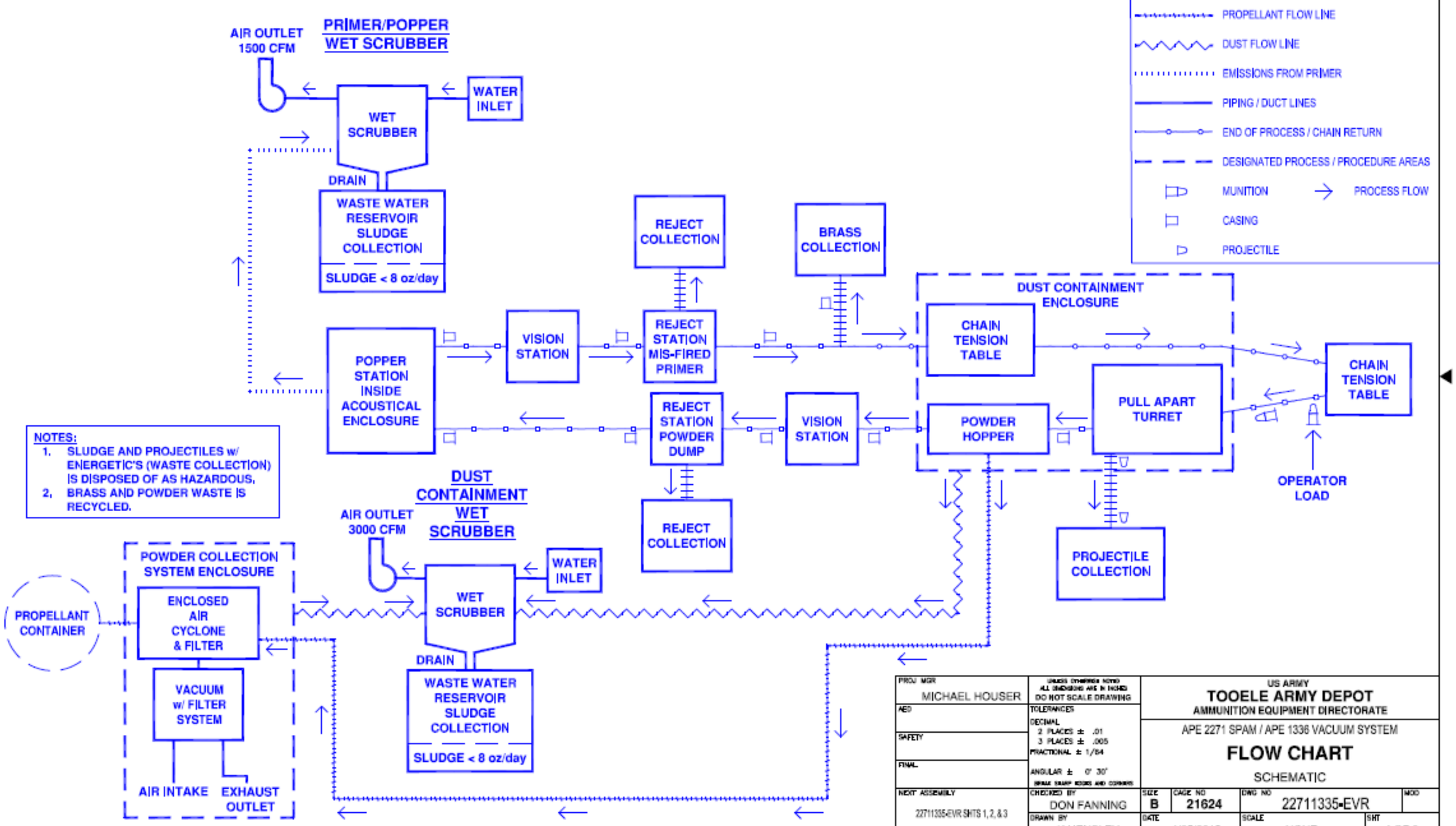

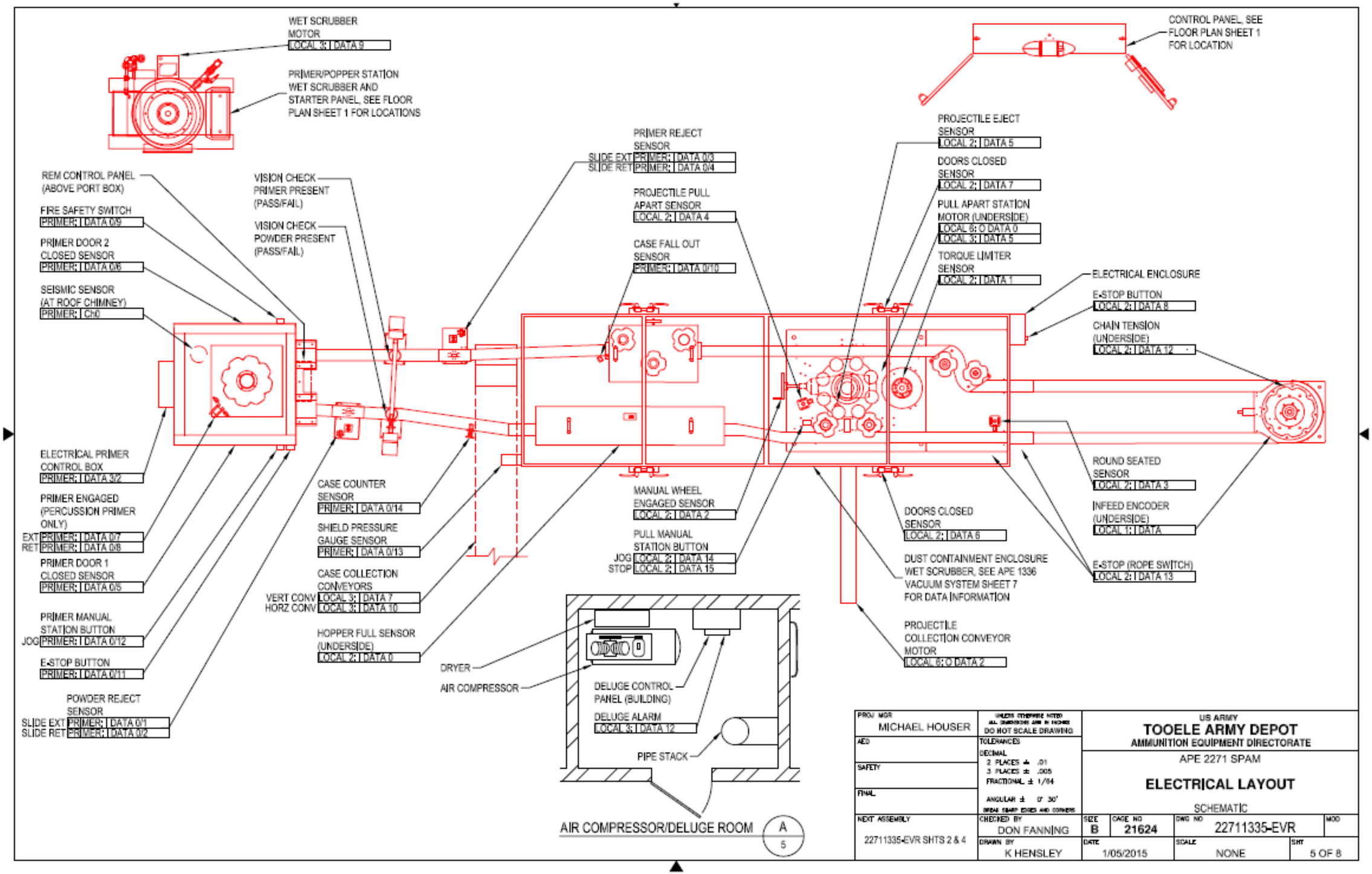

PROJ MGR: MICHAEL HOUSER	UNLESS OTHERWISE NOTED ALL DIMENSIONS ARE IN INCHES DO NOT SCALE DRAWING	US ARMY TOOELE ARMY DEPOT AMMUNITION EQUIPMENT DIRECTORATE	
AED	TOLERANCES DECIMAL 2 PLACES ± .01 3 PLACES ± .005 FRACTIONAL ± 1/64 ANGULAR ± 0° 30' BREAK SHARP EDGES AND CORNERS	APE 2271 SPAM	
SAFETY		ELECTRICAL LAYOUT	
FINAL		SCHEMATIC	
NEXT ASSEMBLY: 22711335-EVR SHTS 2 & 4	CHECKED BY: DON FANNING	SIZE: B	CAGE NO: 21624	DWG NO: 22711335-EVR	MOD
	DRAWN BY: K HENSLEY	DATE: 1/05/2015	SCALE: NONE	SHT: 5 OF 8	

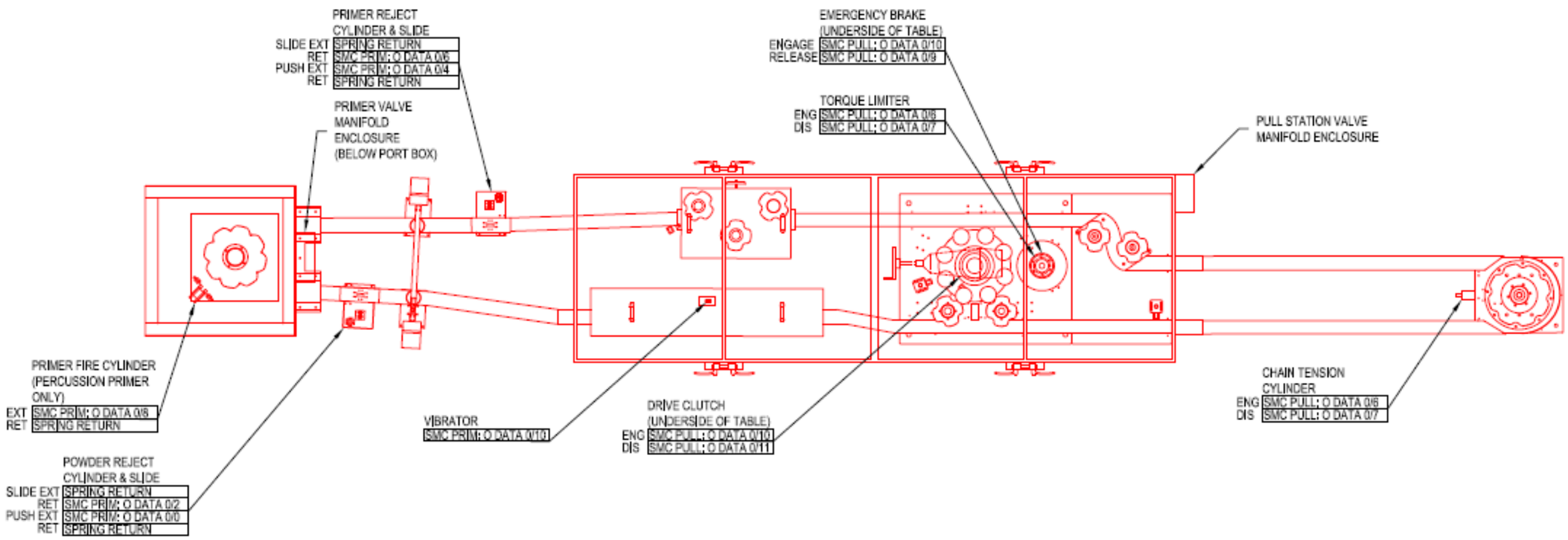

PROJ MGR MICHAEL HOUSER	UNLESS OTHERWISE NOTED ALL DIMENSIONS ARE IN INCHES DO NOT SCALE DRAWING	US ARMY TOOELE ARMY DEPOT AMMUNITION EQUIPMENT DIRECTORATE			
AED	TOLERANCES DECIMAL 2 PLACES ± .01 3 PLACES ± .005 FRACTIONAL ± 1/64 ANGULAR ± 0° 30' BREAK SHARP EDGES AND CORNERS	APE 2271 SPAM			
SAFETY		PNEUMATIC LAYOUT			
FINAL		SCHEMATIC			
NEXT ASSEMBLY 22711335-EVR SHTS 2 & 4	CHECKED BY DON FANNING	SIZE B	CAGE NO 21624	DWG NO 22711335-EVR	MOD
	DRAWN BY K HENSLEY	DATE 1/05/2015		SCALE NONE	SHT 6 OF 8

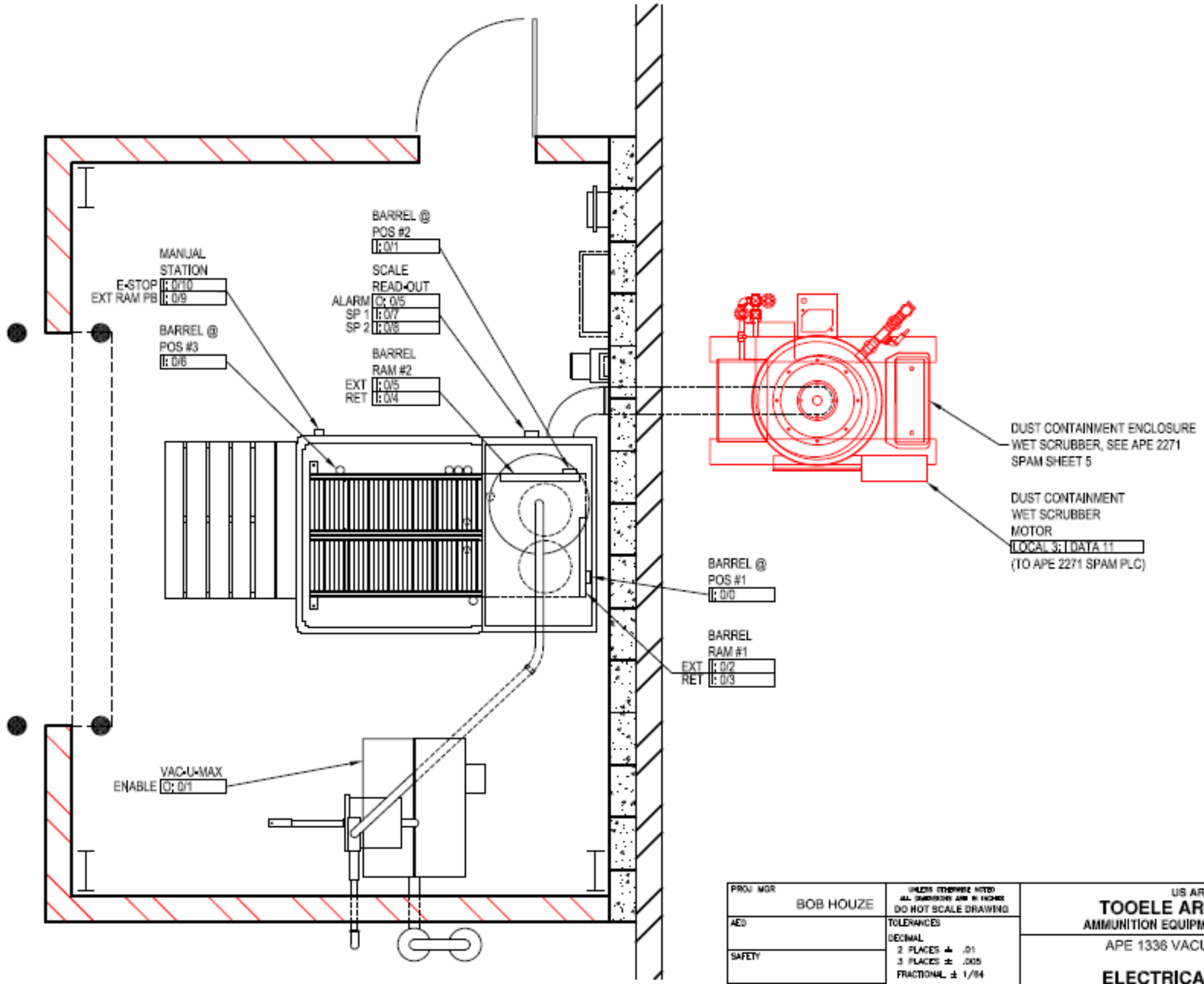

PROJ MGR: BOB HOUZE	UNLESS OTHERWISE NOTED ALL DIMENSIONS ARE IN INCHES DO NOT SCALE DRAWING	US ARMY TOOELE ARMY DEPOT AMMUNITION EQUIPMENT DIRECTORATE			
AED	TOLERANCES DECIMAL 2 PLACES ± .01 3 PLACES ± .005 FRACTIONAL ± 1/64 ANGULAR ± 0° 30' BREAK SHARP EDGES AND CORNERS	APE 1336 VACUUM SYSTEM			
SAFETY		ELECTRICAL LAYOUT			
FINAL		SCHEMATIC			
NEXT ASSEMBLY: 22711335-EVR SHTS 3 & 4	CHECKED BY: DON FANNING	SIZE: B	CAGE NO: 21624	DWG NO: 22711335-EVR	MOD
	DRAWN BY: K HENSLEY	DATE: 1/05/2015	SCALE: NONE	SHT: 7 OF 8	

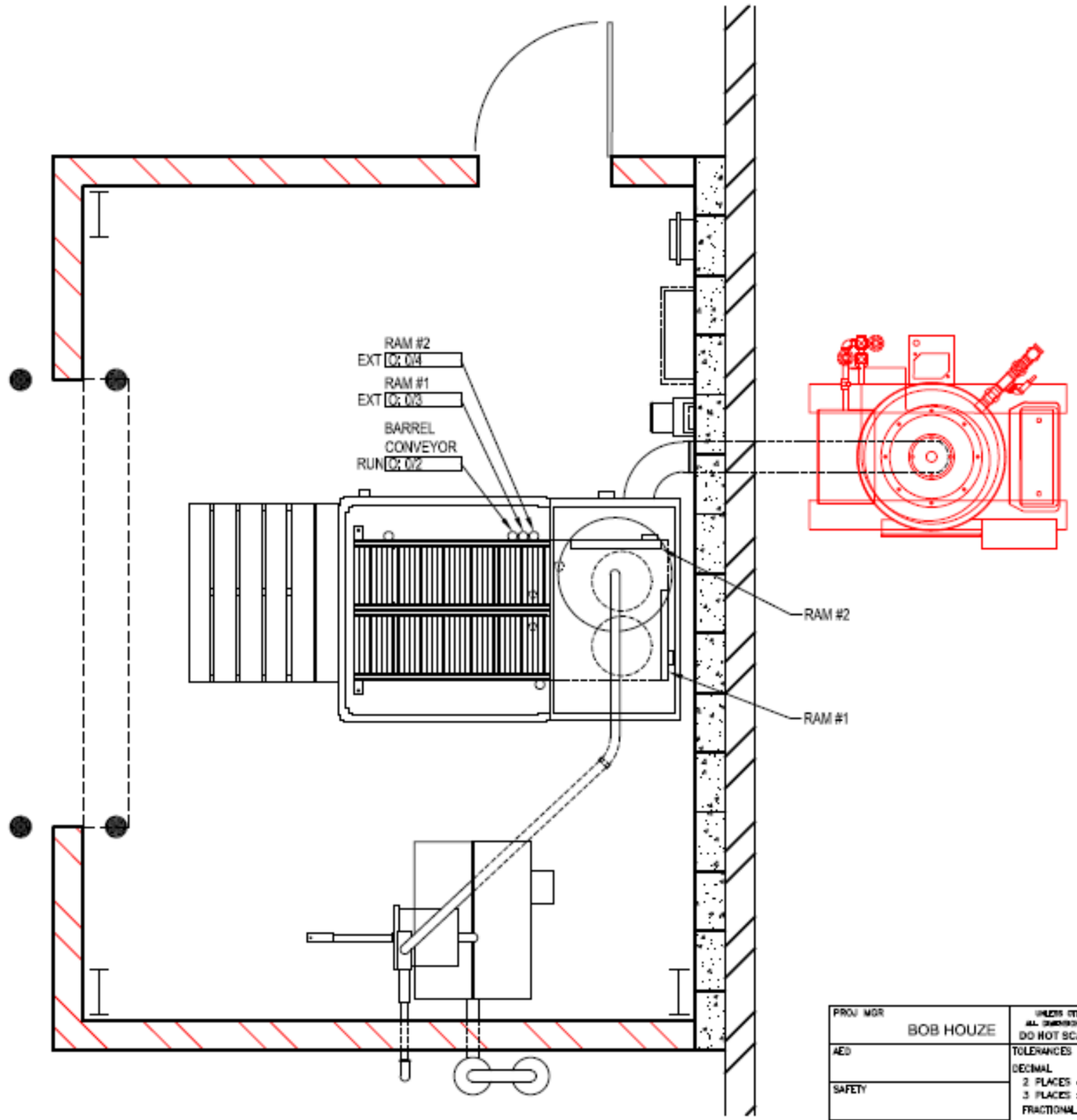

PROJ MGR BOB HOUZE	UNLESS OTHERWISE NOTED ALL DIMENSIONS ARE IN INCHES DO NOT SCALE DRAWING	US ARMY TOOELE ARMY DEPOT AMMUNITION EQUIPMENT DIRECTORATE			
AED	TOLERANCES DECIMAL 2 PLACES ± .01 3 PLACES ± .005 FRACTIONAL ± 1/64 ANGULAR ± 0° 30' BREAK SHARP EDGES AND CORNERS	APE 1336 VACUUM SYSTEM			
SAFETY		PNEUMATIC LAYOUT			
FINAL		SCHEMATIC			
NEXT ASSEMBLY 22711335-EVR SHTS 3 & 4	CHECKED BY DON FANNING	SIZE B	CAGE NO 21624	DWG NO 22711335-EVR	MOD
	DRAWN BY K HENSLEY	DATE 1/05/2015		SCALE NONE	SHT 8 OF 8