EXECUTIVE SUMMARY

SELENIUM PROGRAM

GREAT SALT LAKE WATER QUALITY STUDIES

Development of a Selenium Standard for the Open Waters of Great Salt Lake

STATE OF UTAH

DEPARTMENT OF ENVIRONMENTAL QUALITY

DIVISION OF WATER QUALITY

CH2MHILL

CWECS

MAY 2008

EXECUTIVE SUMMARY

SELENIUM PROGRAM

GREAT SALT LAKE WATER QUALITY STUDIES

Development of a Selenium Standard for the Open Waters of Great Salt Lake

STATE OF UTAH

DEPARTMENT OF ENVIRONMENTAL QUALITY

DIVISION OF WATER QUALITY

PREPARED BY

CWECS

CH2MHILL

215 S. State Street

Suite 1000

Salt Lake City, Utah 84111

MAY 2008

Acknowledgements

The selenium program would not have been possible without valuable contributions from the following people and organizations as well as countless others who supported the development and completion of this effort:

Utah Division of Water Quality

Walter Baker
William O. Moellmer
Theron Miller
Ying-Ying Macauley
Jodi Gardberg

North Davis Sewer District

Kevin Cowan

Science Panel

William Moellmer, Utah Division of Water Quality
Theron Miller, Utah Division of Water Quality
Joseph Skorupa, U.S. Fish and Wildlife Service
Theresa Presser, U.S. Geological Survey
Anne Fairbrother, Parametrix, Inc.
William Adams, Rio Tinto
William Wuerthele, Consultant
Brad Marden, Parliament Fisheries
Don Hayes, University of Louisiana

Steering Committee

Dave Grierson, UDNR/Forestry Fire and State Lands
Clay Perschon, UDNR/Division of Wildlife Resources
Karen Hamilton, U.S. Environmental Protection Agency, Region 8
Nathan Darnall, U.S. Fish and Wildlife Service
David L. Naftz, U.S. Geological Survey
Don Leonard, Utah Artemia Association
Jim Huizingh, Morton Salt
Kelly Payne, Kennecott Utah Copper
Richard Bay, Jordan Valley Water Conservancy District
Leland Myers, Central Davis Sewer District
Maunsel Pearce, Great Salt Lake Alliance
Robert W. Adler, University of Utah
Chris Montague, The Nature Conservancy of Utah
Richard West, West Side Associated Duck Clubs
Delane McGarvey
Richard Sprott, Utah Department of Environmental Quality
Walt Baker, Utah Division of Water Quality

Principal Investigators

John F. Cavitt, Weber State University
Michael Conover, Utah State University
Wayne Wurtsbaugh, Utah State University
Brad T. Marden, Parliament Fisheries, LLC
David L. Naftz, U.S. Geological Survey
William P. Johnson, University of Utah
Martin Grosell, University of Miami
Many students and field, office, and laboratory assistants

CH2M HILL

Jeff DenBleyker
Harry Ohlendorf
Earl Byron
Gary Santolo
Dan Moore

Frontier Geosciences, Inc.

LET, Inc.

Other Advisors

David Buchwalter, North Carolina State University
Thomas W. Way, U.S. Geological Survey

Executive Summary

Great Salt Lake is of vital importance to resident and migratory birds, local recreation, and the brine shrimp and mineral industries. In response to this importance, and in response to increasing development pressures within the lake's watershed, the State of Utah (through the Department of Environmental Quality, Division of Water Quality [DWQ]) initiated a program to support the development of a site-specific, numeric water quality standard for selenium for the open waters of the lake. Those waters are currently protected for their beneficial uses through the application of the narrative standard in the state water quality standards (State of Utah, R317-2-7).

This report describes the overall program for development of the selenium standard and focuses specifically on the research program conducted to provide information to support that standard.

Background

Study Area

Figure ES-1 shows the study area referred to as the "open waters of Great Salt Lake" for this project. This area is commonly referred to in the literature as Gilbert Bay or the South Arm and includes Ogden Bay and Carrington Bay. Farmington Bay, Gunnison Bay (also known as the North Arm), Bear River Bay, Willard Bay, and Stansbury Bay are not included in the study area.

FIGURE ES-1
Great Salt Lake Study Area

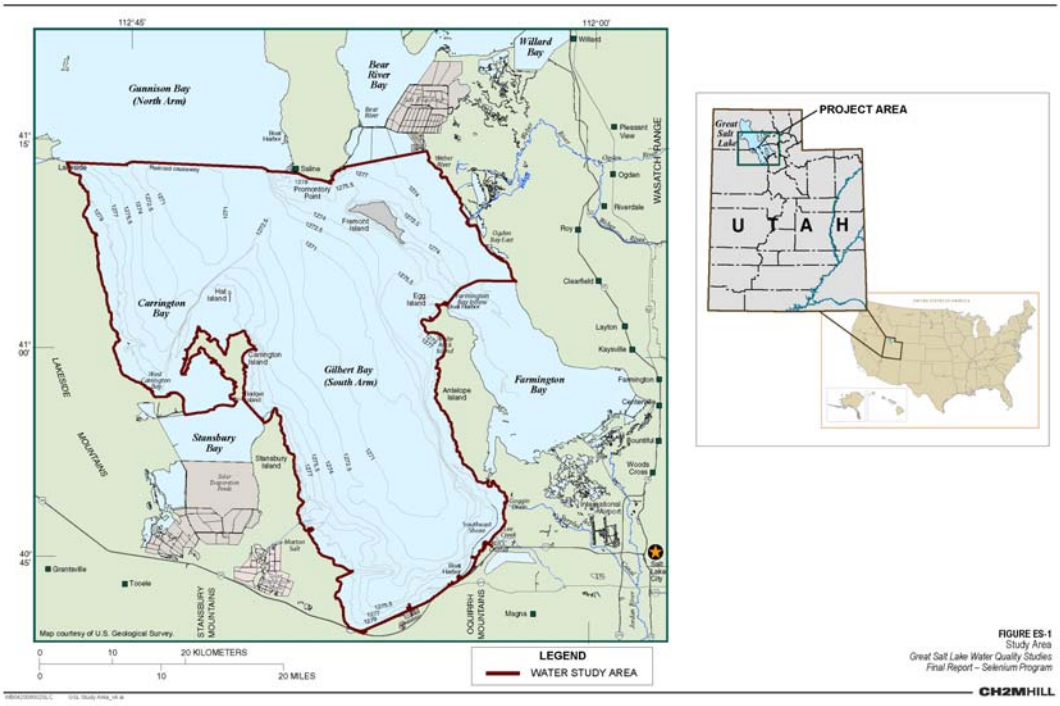

Need for a Site-Specific Standard

The DWQ has specified appropriate beneficial uses for waters of the State and protects those uses through the development and enforcement of water quality standards. Due to the unique geochemistry of Great Salt Lake, the application of national fresh-water selenium water quality criterion to Great Salt Lake is inappropriate (EPA 1987, 2004). The open waters of Great Salt Lake have instead historically been protected for their beneficial uses through the application of a narrative clause in the State water quality standards (R317-2-7). Any discharges directly to the lake are required to meet background concentrations in the lake, or the State has required the discharger to complete site-specific studies to establish a numeric standard that is protective of the lake's beneficial uses (Ostler, 2004).

Beneficial Uses of Waters of Great Salt Lake

1. Primary Contact Recreation
2. Secondary Contact Recreation
3. Waterfowl, Shorebirds, and Other Water-oriented Wildlife
4. Aquatic Food Organisms
5. Mineral Extraction

Kennecott Utah Copper Corporation (KUCC) completed studies from 2000 to 2002 that recommended a site-specific water quality standard for selenium to be included as part of their Utah Pollution Discharge Elimination System (UPDES) discharge permit to Great Salt Lake (Brix et al., 2004). These studies identified a proposed "de facto" chronic numeric standard for selenium in Great Salt Lake of 27 micrograms of selenium per liter (µg Se/L). The DWQ currently uses this selenium concentration in assessing and enforcing the Kennecott UPDES discharge permits to Great Salt Lake (DWQ Fact Sheet, 2004a).

Recent proposals for new discharges of wastewater to Great Salt Lake led to a recommendation that the DWQ complete additional research to verify that the discharge of wastewaters containing selenium is not harmful to the Great Salt Lake ecosystem. The DWQ convened the Great Salt Lake Water Quality Steering Committee, consisting of key stakeholders, and an expert Science Panel in 2004. Their role was to investigate and recommend a new, site-specific water quality standard for selenium for the open waters of Great Salt Lake.

Program Development

The DWQ developed a public involvement, consultation, and coordination program (including the Great Salt Lake Water Quality Steering Committee, the Science Panel, and a public involvement program) and developed a technical program (including analytical methodologies, a conceptual model for selenium in Great Salt Lake, threshold values, and the research program) to address the need for a site-specific standard. Development of analytical methodologies and a conceptual model that characterizes selenium cycling in the study area were completed first. These were essential precursors to the research program because of the need to be able to analyze for selenium in the highly saline waters of the lake (historic measurements of waterborne selenium concentrations ranged from 20 to 200 µg Se/L) and to provide a framework for definition of information needs (that is, research) for establishment of the water quality standard.

The simplified conceptual model for selenium cycling in the open waters of Great Salt Lake (Figure ES-2) includes three primary components: (1) selenium in the upper food chain, (2) selenium in the lower food chain, and (3) selenium in the water and sediment. Due to the

bioaccumulative nature of selenium, selenium in the system is generally recognized to originate at the "bottom" of the conceptual model (that is, from selenium in the water and sediment [abiotic component]) and move "up" through the lower food chain (food web component) and into the upper food chain (birds).

FIGURE ES-2
Simplified Conceptual Model for Selenium Cycling in Great Salt Lake

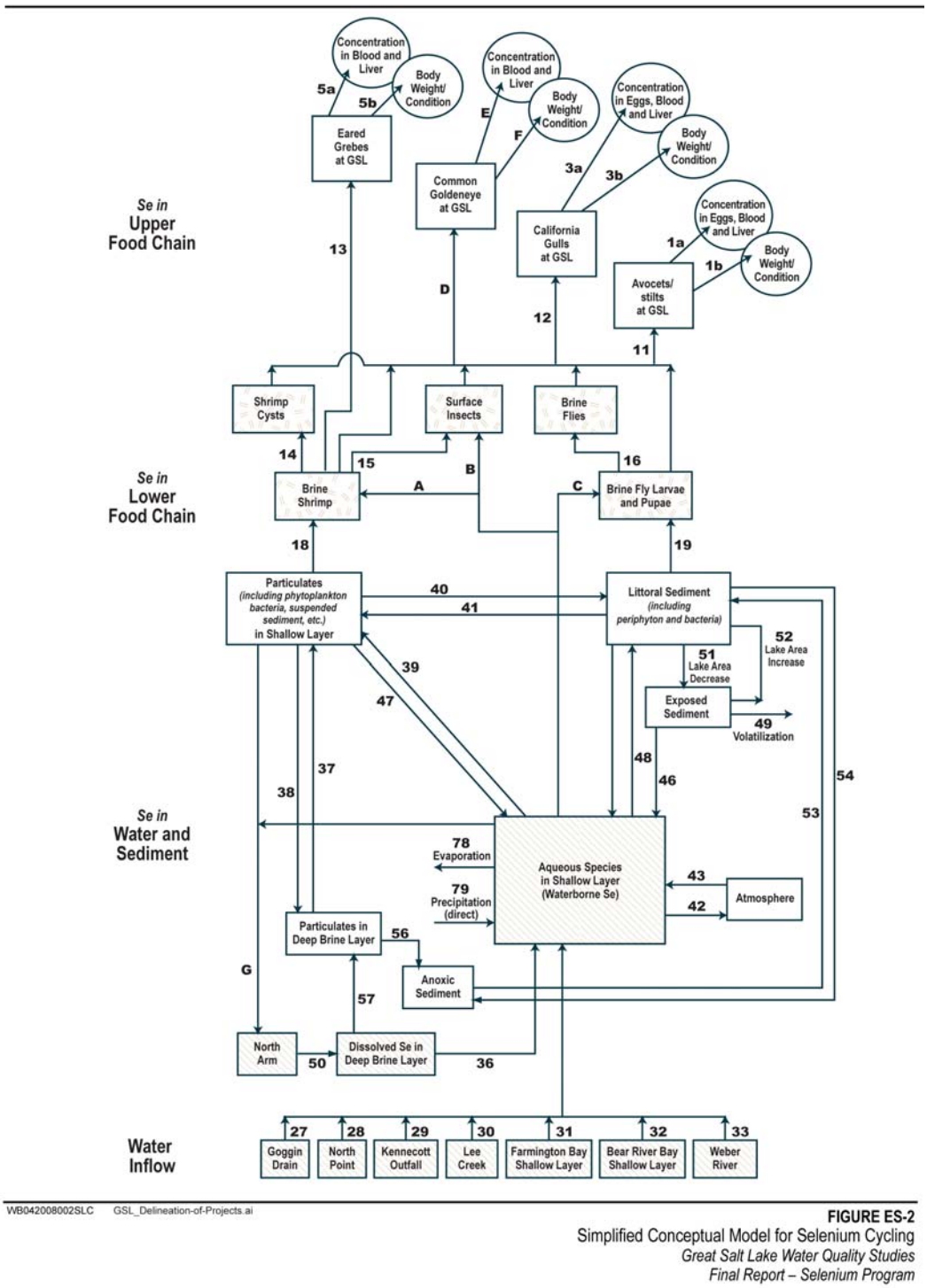

WB042008002SLC GSL_Delineation-of-Projects.ai

FIGURE ES-2
Simplified Conceptual Model for Selenium Cycling
Great Salt Lake Water Quality Studies
Final Report – Selenium Program

Through development of the conceptual model (Johnson et al., 2006), the Science Panel concluded that successful reproduction and body condition of birds were the two most sensitive, or critical, endpoints to be protected in preventing impairment of the beneficial uses of the study area. These critical endpoints, as represented by the reproductive success of California gulls, American avocets and black-necked stilts (species using Great Salt Lake for nesting) and the body condition of eared grebes and common goldeneyes (species using Great Salt Lake during fall migration and over-wintering, respectively), would be the focus for the research program.

Critical Endpoints to be Protected for Open Waters of Great Salt Lake

1. Reproductive Success of Birds
2. Body Condition of Overwintering and Migrating Birds

Toxicity threshold values for the exposure of birds to selenium at Great Salt Lake (i.e., the concentration where effects of selenium are observed) are necessary for the development of a water quality standard that is protective for them. Based on available information, the Science Panel agreed that the most significant exposure of birds occurs through their diet (brine shrimp and/or brine flies), and that the best-documented and most readily monitored effects are those on reproductive success (particularly egg hatchability). The Science Panel agreed in November 2006 to define a range of selenium concentrations in bird diet items and eggs that could serve as the basis for evaluation in the research program and development of the water quality standard.

The range of values the Science Panel recommended for consideration for the water quality standard is defined by the EC_{10} for bird diet items and eggs as defined in Ohlendorf (2003). This summary of toxicological studies showed that we can have 95 percent confidence that a 10 percent reduction (called an "EC_{10}") in egg hatchability of mallards will occur between 3.6 and 5.7 milligrams per kilogram (mg Se/kg) with the highest probability that it will occur at 4.9 mg Se/kg (mg/kg equals parts per million [ppm]). There is only a very small chance (2.5 percent) that the low or high values in the ranges provided are the true concentration where a 10-percent effect, or reduction in egg hatchability, occurs. A similar 10 percent reduction in egg hatchability in mallards will occur between 6.4 and 16 mg Se/kg with the highest probability that it will occur at 12 mg Se/kg. Table ES-1 shows this range of selenium concentrations in the diet and eggs and the associated best estimates for percent reduction in egg hatchability for mallards for each selenium concentration (see Table ES-1).

TABLE ES-1
Selenium Concentration Ranges and Associated Reduction in Egg Hatchability

Diet Selenium (mg /kg)	Reduction in Hatchability	Egg Selenium (mg/kg)	Reduction in Hatchability
3.6	3%	6.4	2%
4.9	10%	12	10%
5.7	18%	16	21%

The Science Panel determined that selection of the actual water quality standard within these ranges is a question of what level of protection the State of Utah wishes to afford. It is a question of philosophy rather than science and should be determined by the Steering Committee and Water Quality Board rather than the Science Panel. The Science Panel and

Steering Committee agreed that the Science Panel would not provide an outright recommendation for a water quality standard but would 1) recommend a range of values with associated levels of reduction in hatchability and 2) provide individual recommendations of Science Panel members for a water quality standard. These items would be offered by the Science Panel for consideration by the Steering Committee and Water Quality Board.

Objectives

Using the conceptual model for selenium, the Science Panel developed a series of specific questions that would further their understanding of selenium cycling in Great Salt Lake and help them develop their recommendation for a selenium water quality standard. The central question the research program was to resolve was stated as: "*What is the acceptable waterborne concentration of selenium that prevents impairment of the beneficial uses of the open waters of Great Salt Lake?*" Figure ES-3 illustrates five study questions that were developed to answer the central question and how they relate to the development of the research program.

FIGURE ES-3
Program Questions Relative to Projects

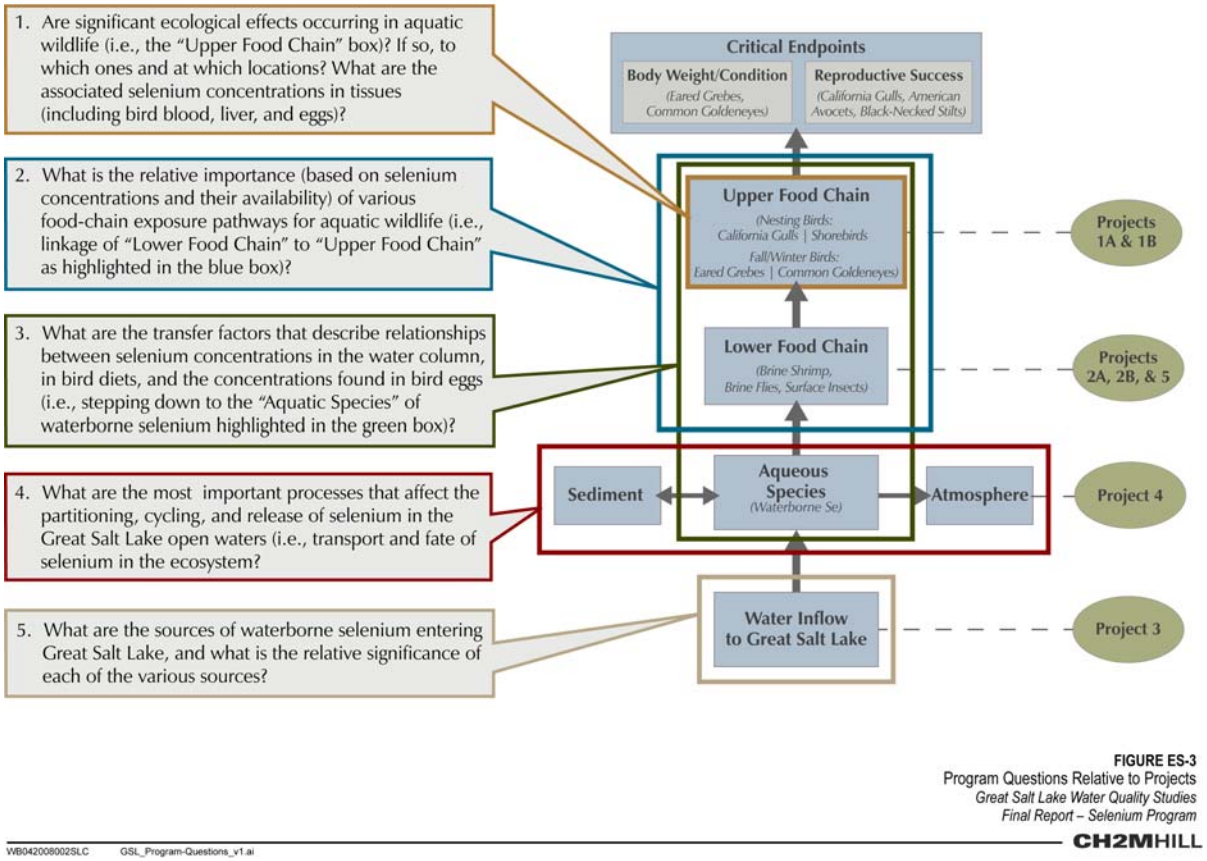

FIGURE ES-3
Program Questions Relative to Projects
Great Salt Lake Water Quality Studies
Final Report – Selenium Program
WB042008002SLC GSL_Program-Questions_v1.ai CH2MHILL

Research Projects

Seven projects were completed in 2006, 2007, and 2008. Detailed project data quality objectives, workplans, and standard operating procedures are found in the S*elenium Program Manual* (CH2M HILL, 2006). Detailed project background, objectives, methods, and results

were documented in each project's final report. Data and observations were integrated into a quantitative model and synthesis report as described in this document. The following projects were initiated in 2006:

- Project 1A – Determine the concentration and effect of selenium in shorebirds through the sampling of adult birds, eggs, diet, water, and sediment
- Project 1B – Determine the concentration and effect of selenium in California gulls through the sampling of adult birds, eggs, diet, water, and sediment. Determine the concentration and effect of selenium in eared grebes and common goldeneyes through the sampling of adult birds when they arrive at Great Salt Lake and before leaving the lake
- Project 2A – Synoptic survey of selenium in periphyton and brine fly larvae from the benthic zone (that is, lake bottom)
- Project 2B – Synoptic survey of selenium in water, seston (that is, suspended material including algae), and brine shrimp
- Project 3 – Measurement and modeling of selenium loads to Great Salt Lake
- Project 4 – Measurement of selenium flux to and from sediment and atmosphere

A review of initial data collected for each of the projects in 2006 identified the need for additional studies to be completed in 2007. These include:

- Project 1A – Repeat a subset of the 2006 sampling program in 2007 with the addition of analysis of samples for mercury
- Project 1B – Repeat a subset of the 2006 sampling program in 2007 with the addition of analysis of samples for mercury and the sampling of a gull colony at a freshwater location
- Project 2B – Continue 2006 sampling program through July 2007
- Project 4, Volatilization – Directly measure volatilization on the open waters of Great Salt Lake to verify estimates of selenium loss to the atmosphere
- Project 4, Sedimentation – Collect additional shallow and deep sediment cores to verify sedimentation rates and permanent burial of selenium in sediment
- Project 5 – Complete kinetic studies in the laboratory to define the transfer of selenium from water and diet to brine shrimp

Results

The following represents a brief summary of key results from each project.

Project 1 – Upper Food Chain

Shorebirds

American avocets and black-necked stilts were found to have a mixed diet of invertebrates from both fresh water and saline water sources along the shoreline of Great Salt Lake (Cavitt, 2008a, 2008b). Brine fly larvae were found to be the most likely food chain link for selenium; selenium concentrations in food items ranged between 0.3 and 3.8 micrograms of

selenium per gram (µg Se/g) with an overall mean selenium concentration in food items of 1.7 µg Se/g (all selenium concentrations for tissue and sediment are expressed on dry-weight basis in this report).

Selenium concentrations found in shorebird blood and livers were higher than expected based on concentrations found in food sources and bird eggs (selenium concentrations in bird blood and livers are generally expected to be more similar to those found in the bird's diet and eggs than indicated by results for these shorebirds). Further investigation and analysis of the datasets concluded that the most likely explanation for the higher-than-expected blood selenium concentrations was exposure to elevated mercury concentrations in Great Salt Lake. Selenium may play a role in mercury detoxification (that is, it counteracts the toxic effects of mercury) for individuals with high mercury levels.

Banding an American Avocet (Recurvirostra americana) at Ogden Bay

Despite elevated levels of selenium found in adult tissues, egg selenium concentrations were relatively low and ranged between 1.2 and 9.2 µg Se/g in individual eggs, with an overall mean egg concentration of 2.7 µg Se/g (68 eggs collected). Breeding (nest) success ranged between 94 and 97 percent. These success rates were considered consistent with what would be expected for non-contaminated sites.

The data collected during the 2006 and 2007 breeding seasons suggest that the selenium concentration found in water samples, food chain invertebrates, and eggs at Antelope Island and Ogden Bay were low and within typical background levels reported elsewhere. Elevated selenium levels found at Saltair are likely due to freshwater inflows from the KUCC outfall.

California gull at Saltair (Larus californicus)

Gulls, Grebes, and Ducks

Most California gulls collected from three colonies on Great Salt Lake (68 percent) consumed exclusively brine shrimp (Conover et al., 2008a). Others ate a mixture of other invertebrates, fish, and garbage. Adult brine shrimp were found to be the most likely food chain link for selenium in gulls. Egg selenium concentrations ranged from 2.0 to 4.3 µg Se/g, with an overall mean selenium concentration in eggs of 2.9 µg Se/g. Of 72 eggs collected, only one had no embryo development and none exhibited embryo malposition or deformities. None of the 100 chicks that were examined exhibited teratogenesis (deformities). Similar to the shorebirds, selenium concentrations found in gull blood and livers were higher than expected based on concentrations found in their food sources and eggs. Further investigation and analysis of the datasets concluded that the most likely explanation for the higher-than-expected blood selenium concentrations was exposure to elevated mercury

concentrations in Great Salt Lake. Bird body weight was not correlated to blood or liver selenium concentrations. Despite elevated selenium levels found in gull blood and livers, selenium was not found to impair gull health or reproduction.

Eared Grebe (Podiceps nigricolis)

Eared grebes collected during the fall of 2006 were found to eat primarily brine shrimp (Conover et al, 2008b). Selenium concentrations found in grebe blood and livers were higher than expected. Further investigation and analysis of the datasets concluded that the most likely explanation for the higher-than-expected blood selenium concentrations was exposure to elevated mercury concentrations in Great Salt Lake. Measures of body condition such as mass of body, liver, pancreas, and spleen were not correlated to selenium or mercury. There was a positive relationship between selenium and body mass that is undoubtedly a result of physiological characteristics of the grebe. The birds gain weight during their fall migration stay on the lake, and while they are there, they also accumulate more selenium from their food. Confounding variables and insufficient data did not allow a determination to be made regarding the effect of selenium and mercury on the body condition of eared grebes.

Common Goldeneye (Bucephala clangula)

Selenium and mercury levels in common goldeneye collected in 2005 and 2006 were higher than expected (Conover et al., 2008c). Similar to the results for other species previously described, further investigation and analysis of the datasets concluded that exposure to elevated mercury concentrations in Great Salt Lake were the most likely explanation for the higher-than-expected blood selenium concentrations. Body mass and liver mass were not correlated to selenium or mercury in the blood or liver. Fat mass was negatively correlated with selenium concentrations in liver and mercury concentrations in liver and blood. Selenium and mercury concentrations were found to increase during the wintering period. Confounding variables and insufficient data did not allow a determination to be made regarding the effect of selenium and mercury on the body condition of common goldeneyes.

Project 2 – Lower Food Chain

Benthic Zone (Bottom of the Lake)

Brine fly larvae and pupae were sampled from biostromes (also called stromatolites, which are hard underwater structures) and shore-zone sediments from locations near the northern and southern ends of Antelope Island (Wurtsbaugh, 2007). Samples of biostromes, sediment, and adult brine flies were also collected. Brine flies were found to be much more abundant on biostromes than on nearby sand or mud substrates. Concentrations were found to increase from larvae (1.3 µg Se/g) to pupae (1.5 µg Se/g) to adult flies (1.8 µg Se/g). The limited number of samples did not provide adequate information to develop a predictive relationship between selenium in brine fly food sources, sediment, and the brine fly tissue.

Collecting Brine Flies near Antelope Island (Photo courtesy Wayne Wurtsbaugh)

Pelagic Zone (Water Column of the Lake)

Data on brine shrimp and lake characteristics included data on water quality, seston chemistry, chlorophyll concentrations, algal cell counts, complete density estimates of brine shrimp by life stage, and brine shrimp and seston selenium content (Marden, 2007, 2008). Brine shrimp and phytoplankton exhibited characteristics indicative of a generally "healthy" population. Selenium concentrations in water were not significantly variable spatially but changed seasonally, with a net increase of 0.1 to 0.2 µg Se/L for the lake water column for the period of study. The mean waterborne selenium concentration for 2006 and 2007 was 0.6 µg Se/L. Similarly, seston and brine shrimp selenium concentrations variably increased over the period of study. No statistically significant relationships were found between brine shrimp selenium concentrations and those in water or seston. The geometric mean for selenium concentrations in adult brine shrimp in 2007 was 4.3 µg Se/g and for brine shrimp nauplii/cysts was 2.4 µg Se/g.

Filtering seston from the watercolumn on Great Salt Lake (photo courtesy Brad Marden)

Project 3 – Selenium Loads

Six gages were operated on tributaries to Great Salt Lake for water quality sampling and flow measurements, and standard U.S. Geological Survey (USGS) models (LOADEST) were used

to produce daily loading estimates over the period of record (Naftz et al., 2008). Total estimated selenium load was 1,540 kilograms (kg) over the full 15-month study period, with an annual (May 2006 to April 2007) load of 1,480 kg. The KUCC outfall and Goggin Drain contributed the greatest proportion of loads among sites (27 percent each), although the Bear River contributed an almost equal amount (25 percent). Loads from Farmington Bay, Weber River, and Lee Creek comprised the remaining measured load. The greatest total loads over time at all sites occurred during May 2006. Most of the influent selenium was in the dissolved phase as selenate ($Se6^+$). Measurements at the railroad causeway separating the North and South Arms of the lake indicated a possible net positive flow and selenium load from south to north over the period of record with a mean loss from the south arm of about 2.4 kg Se per day (800 kg per year).

USGS gauge at KUCC outfall (10172650)

The mean waterborne selenium concentration for the study area increased over the 15-month period of the study and exceeded the change in concentration (0.17 µg Se/L) that could be expected from the simple addition of influent loads. The mean waterborne selenium concentration for unfiltered lake water samples collected as part of this project was 0.60 µg Se/L. Additional unmeasured sources of selenium could account for as much as 1,500 kg of additional load during the 2006 through 2007 period.

Project 4 – Selenium Flux

Data collected in this project provided a great amount of detail about in-lake geochemical processes and yielded estimates of important losses of selenium from the water column (Johnson et al., 2008). The project provided baseline characterizations of selenium in the water column, including the upper, mixed layer, and the deep brine layer, as well as in sediments and as volatile compounds exiting the lake in vapor phase. Measurements of selenium in lake water showed that most of it was present in the dissolved phase but that selenium concentrations were relatively higher in the particulate fraction of the deep brine layer. The average selenium concentration for unfiltered water samples collected as part of this project was 0.64 ± 0.28 µg Se/L and for filtered water samples 0.49 ± 0.25 µg Se/L.

Collecting sediment core on Great Salt Lake (photo courtesy Bill Johnson)

Volatilization of selenium from surface waters was discovered to be a major loss process for selenium from the water column and, although highly variable, probably accounts for a net loss of selenium more than four-fold greater than that attributed to sediment burial. The total

selenium estimated to be lost to the atmosphere was 2,108 kg (estimated uncertainty range is 1,380 to 3,210 kg per year).

The permanent sedimentation flux was estimated to be 520 kg per year with an uncertainty range of 45 to 990 kg per year. Downward sedimentation fluxes were highest where influenced by the Bear River inflow, and were lowest in the shallow brine layer located near the northwest-southeast axis of the study area. Sediment accumulation rates were greater in the deep brine layer than in shallow brine layer areas, suggesting that re-suspension accounted for most of the sediment accumulation at depth.

Combined volatilization and sedimentation fluxes out of Great Salt Lake total to about 2,628 kg per year based upon the geometric means. Volatilization was demonstrated to be the major mechanism of selenium removal from Great Salt Lake. The measured loss fluxes more than balanced the measured annual load (1,480 kg per year) during the study period. The observed increase in total selenium concentration during the study period indicates that some selenium loads have not yet been measured or that some of the losses may be overestimated. Further monitoring is needed to better define the selenium mass balance in Great Salt Lake.

Project 5 – Brine Shrimp Kinetics Study

Brine Shrimp (Artemia franciscana)
(Photo courtesy Martin Grosell)

Detailed laboratory studies were completed to determine selenium accumulation rates in brine shrimp from water and diet (Grosell, 2008). Initial studies found that higher salinities reduced feeding by the brine shrimp and reduced their uptake of selenium directly from water, so a salinity of 100 g/L was used for experiments.

The results revealed clear saturation kinetics response at waterborne concentrations below 10 µg Se/L. Between 10 and 20 µg Se/L in water there was a "knee" in the brine shrimp response pattern. Much higher values of bioaccumulation were associated with water concentrations up to 40 µg Se/L. Higher water values (up to 80 µg Se/L) demonstrated decreased bioaccumulation, possibly due to selenium regulation by the brine shrimp. The studies also showed that low food concentrations (below 10 µg Se/g in algae) produced selenium assimilation efficiencies as high as 90 percent. Higher selenium concentrations in algae produced slightly lower assimilation efficiencies.

The final result of the study was a two-part model that adds waterborne and dietary exposures to produce an estimate of bioaccumulated selenium in brine shrimp.

Quantitative Conceptual Model Development

A quantitative model was developed to integrate project data into the conceptual model developed previously by Johnson et al. (2006). The quantitative conceptual model was developed with two components—a Mass Balance Model and a Bioaccumulation Model.

Mass Balance Model

A modified mass balance approach was used to link measured and estimated Great Salt Lake concentrations of selenium in various media into a model that would be responsive to changing ambient conditions. The basic concept is to sum all input and removal mechanisms to estimate a waterborne selenium concentration for the study area. Measured lake and influent selenium concentrations and loads were compiled as monthly geometric mean values, whenever possible. Modeled water column loads and concentrations step through time on a monthly average time step. The model is meant to predict water column concentrations and therefore relies on both external loads (tributaries, atmospheric deposition) as well as internal loading (remineralization from seston and sediments).

The technique of sequentially computing mass balances produced a relatively good match to measured values. At the end of the 15-month measurement period, the predicted water column monthly total selenium concentrations were low by an average of 0.04 µg Se/L (7 percent). A remaining unmeasured total was noted in the reports of Johnson et al. (2008) and Naftz et al. (2008) as evidence for a significant, unmeasured load. In particular, lake water column concentrations during the 2006 through 2007 period were generally observed to rise during a relatively dry year of reduced stream loading. Data are insufficient to resolve the uncertainty in the dataset and resolve questions about long-term patterns of lake assimilation of selenium. The Science Panel recommended that additional monitoring be conducted to build and improve upon the current model (potentially building a fully dynamic model) to allow for more accurate examination of scenarios for future conditions.

Bioaccumulation Model

A Bioaccumulation Model was developed from data collected from Great Salt Lake to describe the transfer of selenium from water and sediment up through the food web and into bird eggs. The Model allows the user to estimate diet and egg selenium concentrations from an assumed waterborne selenium concentration. The model also allows the user to back-calculate a waterborne selenium concentration from an assumed diet or egg selenium concentration. Resulting waterborne, diet, and egg concentrations are listed and plotted upon egg and diet toxicity curves to illustrate potential effects of selenium on egg hatchability (Ohlendorf, 2003).

The Bioaccumulation Model is composed of a series of relationships that describe the transfer of selenium from water up through the food chain. The transfer factors and regression equations that represent these relationships were developed from data collected from Great Salt Lake as part of the research program. The user has the flexibility to select from numerous options to evaluate the sensitivity and results from alternative transfer relationships and bird diet combinations. Figure ES-4 illustrates inputs, outputs, and the general flow of logic of the Bioaccumulation Model.

FIGURE ES-4
Bioaccumulation Model Flow Chart

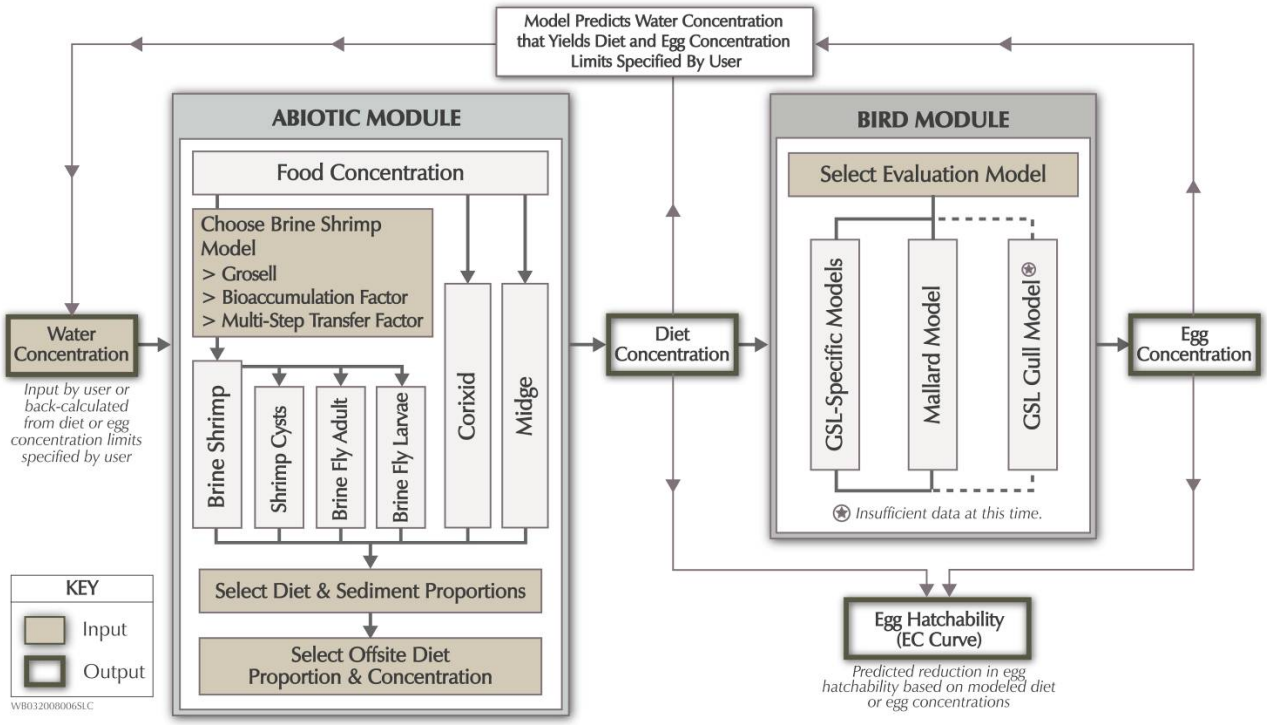

Key Observations

The Science Panel has made the following observations to answer the questions identified in Figure ES-3.

1. **Are significant ecological effects occurring in aquatic wildlife? If so, to which ones and at which locations?** The Science Panel rephrased this question as follows to account for the two critical endpoints previously described:

   Have any adverse effects been observed in the reproductive endpoints for aquatic wildlife due to selenium that were investigated as part of this program?

   No egg hatchability or teratogenic effects were observed in gulls, avocets, or stilts using the open waters of Great Salt Lake. The geometric mean selenium concentration observed for gulls was 2.89 µg Se/g and for shorebirds it was 2.72 µg Se/g. These values are similar to the 85th to 90th percentile of background levels and consistent with a non-contaminated site (Skorupa and Ohlendorf 1991). We did find one egg (out of total number of 133 sampled) with a selenium concentration of 9.2 µg Se/g at the KUCC outfall that is above the lower 95-percent confidence limit (6.4 µg Se/g) but below the median (12 µg Se/g) of the EC_{10} for egg hatchability.

   Have any adverse effects been observed in non-reproductive endpoints (for example, body condition) in aquatic wildlife due to selenium that were investigated as part of this program?

A determination cannot be made at this time due to confounding variables and insufficient data; however, elevated concentrations of selenium and mercury were found in bird blood and livers. This may indicate that some of these birds are using selenium to detoxify mercury.

- The Science Panel determined that the reproductive endpoint is considered the most sensitive endpoint for selenium on Great Salt Lake and will be the basis for the selenium water quality standard for open waters of the lake. Non-reproductive endpoints will require additional research before they can be used in assessing the water quality standard.
- Selenium concentrations in water; sediment; food chain items; and bird liver, blood, and eggs were measured and summarized in Section 5.0 of this report.

2. What is the relative importance of various food-chain exposure pathways for aquatic wildlife?

- Bird diets were determined by Project 1 (Cavitt, 2008a; Conover, 2008a) and summarized in Section 5.0 of this report.
- Although some birds (such as gulls and goldeneyes) are known to consume food items from offsite locations (such as fresh water sources along Great Salt Lake), the assumption in the Bioaccumulation Model is that all birds consume only items they can obtain from the open waters of Great Salt Lake. This represents a conservative scenario where birds are consuming the food item with the most likely food chain link for selenium.
- It is assumed that California gulls consume a diet of 100 percent brine shrimp and shorebirds consume a diet of 100 percent brine fly larvae. Shorebirds are also assumed to consume shore-zone sediment as 5 percent of their diet.
- Various alternatives were incorporated into the Bioaccumulation Model to allow the user to explore and evaluate effects from various combinations of bird diets.

3. What are the transfer factors that describe relationships between selenium concentrations in water column, in bird diets, and the concentrations found in bird eggs?

- Transfer factors, regression equations, and other methods were developed to describe these relationships. The recommended transfer relationships are incorporated into the Bioaccumulation Model. The Model allows the user to select from various relationships and/or change transfer factors if desired.
- The Multi-step, Transfer Factor (MS-TF) model should be used to model uptake of selenium by brine shrimp. This model was developed using site-specific data that follow the uptake of selenium by brine shrimp through seston.
- Until more data are collected, the estimate of selenium in brine fly larvae and adults should be determined through a ratio relating brine fly selenium concentrations to adult brine shrimp concentrations.
- Relationships for shorebirds are site-specific and are the best understood from information we have. For implementation of the water quality standard, relationships

for shorebirds should be used. Specifically, the Shorebird Regression Model should be used to model selenium transfer between bird diet and eggs for shorebirds and the Gull Transfer Factor (GTF) Model for gulls. These models represent site-specific conditions.

4. **What are the most important processes that affect the partitioning, cycling, and release of selenium in the Great Salt Lake open waters?**

- Volatilization was demonstrated to be the major mechanism of selenium removal from Great Salt Lake (geometric mean of 2,108 kg/yr [could range between 820 and 5,240 kg/yr]). Permanent sedimentation follows as the second-most-important mechanism for selenium removal (geometric mean of 520 kg/yr [could range between 45 and 990 kg/yr]). Other mechanisms include shallow zone particulate sedimentation, deep brine layer dissolution and resuspension, and brine shrimp cyst removal.
- A possible loss of about 800 kg per year (geometric mean [could range from 0 to 1,600 kg/yr]) through the railroad causeway from the South Arm to the North Arm was estimated from a few, discrete sampling events. This estimate is uncertain and warrants further work to verify.
- Most selenium was present in the dissolved phase but selenium concentrations were relatively higher in the particulate fraction of the deep brine layer.
- The measured loss fluxes more than balance the measured annual load (1,480 kg per year) during the study period. The observed increase in total selenium concentration during the study period indicates that some selenium loads have not yet been measured or that some losses are overestimated and further monitoring is needed.
- Long-term cycling of selenium within Great Salt Lake was not fully addressed by this program due to the insufficient length of the study period.
- Significant variability in results was observed, but these data represent the best available information. Further work will be required to allow for accurate predictions of future waterborne selenium concentrations.

5. **What are the sources of waterborne selenium entering Great Salt Lake, and what is the relative significance of the various sources?**

- Water quality sampling and flow measurements for six tributaries to the Great Salt Lake identified the following selenium loads to the lake (total of 1,540 kg over the 15-month study period). See Figure ES-5.[1]
- A review of the literature identified the possibility that dry and wet atmospheric deposition could contribute a significant load of selenium to Great Salt Lake. No data from Great Salt Lake are available; however, this load could be as high as 596 kg/yr using relationships from the literature. Therefore, the selenium load attributable to atmospheric deposition could be greater than any single tributary.

[1] The study period was during the drought of 2006-2007.

FIGURE ES-5
Tributary Selenium Loads

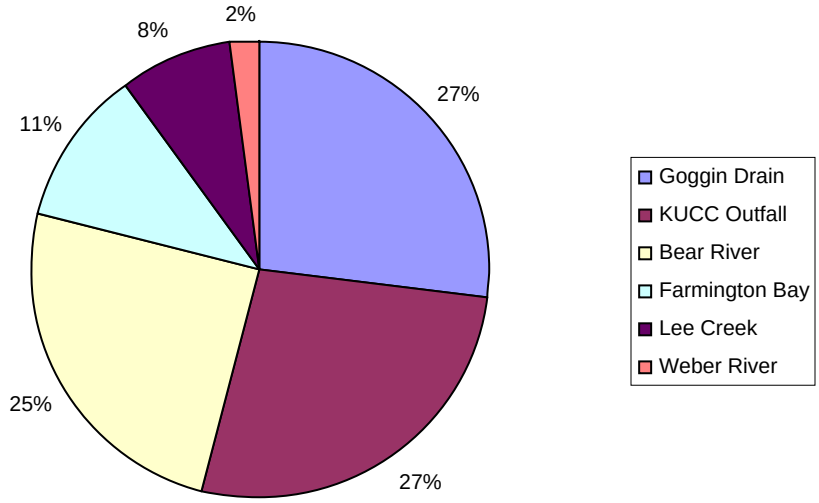

- While lake water levels generally decreased during the study period, waterborne selenium concentrations were observed to increase. This indicates that potential selenium sources have not yet been measured or that some of the losses are overestimated. Possible additional sources could be: (1) unmeasured surface inflows, (2) submarine groundwater discharges, (3) lake sediment pore water diffusion into the overlying water column, and (4) wind-blown dust that is deposited directly on the lake surface.
- Because of the anomalies observed in the overall mass balance of selenium in Great Salt Lake, further work is needed to better understand the mass balance of selenium in the lake.

Recommendations

The Science Panel recommendations include the following:

1. The water quality standard should be a tissue-based standard, based upon the selenium concentration found in the eggs of birds using the open waters of Great Salt Lake.
2. A selenium water quality standard that prevents impairment for aquatic wildlife of Great Salt Lake lies within the range of 6.4 to 16 mg Se/kg for bird eggs (See Fact Sheet in Appendix B).
3. For implementation, the waterborne concentration of selenium associated with the water quality standard will be derived from the Bioaccumulation Model.
4. Given the uncertainties of the current understanding of selenium cycling in Great Salt Lake, the bioaccumulative nature of selenium, the need to incorporate both waterborne and tissue-based selenium concentrations, and the desire to proactively protect and

manage the water quality of Great Salt Lake, the Science Panel has developed a concept for a tiered approach to implementing the selenium water quality standard. The approach assumes the use of the Bioaccumulation Model developed as part of this program to relate water, diet and egg concentrations. The Science Panel recommends that the State of Utah implement a similar tiered approach for monitoring, assessment and management options to ensure the selenium water quality standard is not exceeded. The objectives of the approach are to perform the following:

- Monitor Great Salt Lake to assess trends in selenium concentrations and determine whether they are approaching or exceeding the water quality standard in eggs, using water and diet (measured in brine shrimp and estimated in brine flies by a "translation factor") as indicators of whether the standard is likely to be exceeded in the egg
- Address current uncertainty in modeled bioaccumulation relationships by validating expected bioaccumulation with new data for water or diet concentrations and, if appropriate, egg selenium and hatchability
- Evaluate trigger selenium concentrations that initiate various monitoring, assessment and management actions identified in the assessment framework
- Evaluate the lake with respect to the numeric water quality standard for selenium
- Initiate management actions to mitigate further increases in selenium concentration if an upward trend is observed

The approach implements various trigger concentrations for water, diet, and egg selenium that increase monitoring levels and management options if and when actual selenium concentrations increase.

5. The final water quality standard that prevents impairment of the beneficial uses of the open waters of Great Salt Lake will represent a level of protectiveness (that is, not exceeding a specified level of predicted reduction of egg hatchability) recommended by the Steering Committee and selected by the Water Quality Board.
6. Each Science Panel member prepared a brief position statement providing their individual recommendation for a water quality standard. This statement includes the recommended basis for the standard (all are tissue-based) selenium concentration, associated level of protection, and brief rationale for the recommendation. These position statements were forwarded to the Steering Committee and Water Quality Board for consideration (see Appendix M).
7. Given the uncertainties of the current understanding of the Great Salt Lake ecosystem, it is prudent to identify potential actions DWQ could take to verify and validate the current model, the new water quality standard, and future permit limits. It is recommended that the DWQ consider the following, noting that some of these recommendations are incorporated into the proposed assessment framework:
    - The highest priority research need identified by the Science Panel was to verify the transfer of selenium between the water column and brine shrimp for waterborne concentrations of 0.5 – 5.0 µg Se/L. The current Bioaccumulation Model includes two relationships (BAF and MSTF models) developed from Great Salt Lake data that describe this transfer; however, both were created from a dataset represented by

waterborne concentrations of 0.4 – 0.8 μg Se/L. Further studies would verify these site-specific relationships for higher ranges of waterborne selenium concentrations.

- Periodically reassess the current conceptual model and update it with any new scientific information, as appropriate. The objective of continual reassessments of the model is to improve upon the accuracy of current relationships used in the Bioaccumulation and Mass Balance Models to minimize current uncertainties.
- Monitor brine shrimp selenium concentrations and waterborne selenium concentrations at predetermined intervals throughout Great Salt Lake. The objective is to improve on the current understanding of the transfer of selenium from the water to these diet items and assess long-term trends.
- Complete additional collocated sampling of brine fly larvae and adults and sediment and water. Current brine fly levels are based on a "translation factor" developed from limited brine fly data and brine shrimp data.

Brine shrimp sampling on Great Salt Lake (photo courtesy Brad Marden)

- Complete additional egg sampling studies that relate transfer of selenium from diet to eggs. The objective is to provide additional data points that will improve the statistical power of the current Great Salt Lake Shorebird Model (that is, the regression equation developed from data collected to date) and Great Salt Lake Gull Model (currently not used for lack of observed relationship).
- Continue monitoring tributary inflows and selenium loads to Great Salt Lake in conjunction with lake water column concentrations. The objective is to understand long-term trends, identify other potential selenium sources, and improve upon the current mass balance model. Special emphasis should be placed upon understanding flow inputs/outputs to the North Arm as very little information describing these processes is currently available.
- Evaluate other potential sources of selenium to Great Salt Lake.
- Sample atmospheric deposition of selenium to verify assumptions made in the Mass Balance Model. The objective of this study is to measure both wet and dry atmospheric deposition of selenium and other pertinent meteorological parameters at Great Salt Lake to quantify actual atmospheric selenium loads to Great Salt Lake.
- Conduct a one-time study to determine selenium concentrations in phalaropes when they arrive at Great Salt Lake and before their departure during their season of peak abundance at the lake. The objective of this study is to identify any potential effects of selenium upon their body condition and ability to migrate.

- Conduct further studies to evaluate the potential effects of selenium on non-reproductive endpoints in birds. Confounding variables and insufficient information available during the completion of this project did not allow for a determination of effects due to selenium on those endpoints for Great Salt Lake birds.
- Conduct further studies to understand the potential interaction of selenium and mercury and their effects on aquatic birds using open waters of Great Salt Lake.
- Verify waterborne selenium concentrations at the outer limit of point-source discharge mixing zones at predetermined intervals. The objective is to verify current mixing zone assumptions and potential effects to beneficial uses in these zones.
- Continue verifying discharge concentrations per permit requirements.